1996 System Wiring Diagrams

Buick - Roadmaster

AIR CONDITIONING

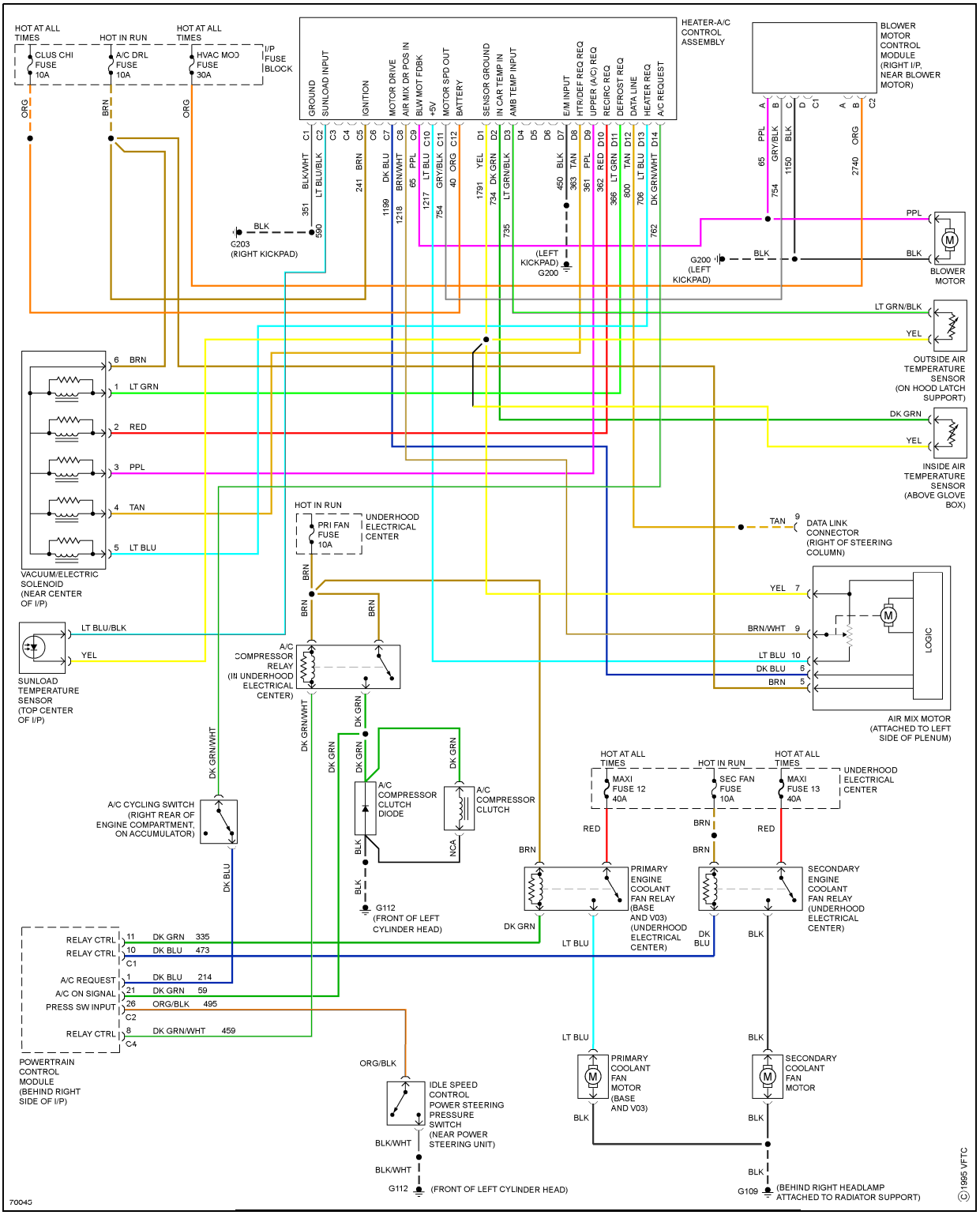
HOT AT ALL TIMES
HOT IN RUN
HOT AT ALL TIMES
CLUS CHI FUSE 10A
A/C DRL FUSE 10A
HVAC MOD FUSE 30A
I/P FUSE BLOCK
HEATER-A/C CONTROL ASSEMBLY
GROUND
SUNLOAD INPUT
IGNITION
MOTOR DRIVE
AIR MIX DR POS IN
BLW MOT FDBK
+5V
MOTOR SPD OUT
BATTERY
SENSOR GROUND
IN CAR TEMP IN
AMB TEMP INPUT
E/M INPUT
HTR/DEF REQ REQ
UPPER (A/C) REQ
RECIRC REQ
DEFROST REQ
DATA LINE
HEATER REQ
A/C REQUEST
BLOWER MOTOR CONTROL MODULE (RIGHT I/P, NEAR BLOWER MOTOR)
G203 (RIGHT KICKPAD)
G200 (LEFT KICKPAD)
BLOWER MOTOR
OUTSIDE AIR TEMPERATURE SENSOR (ON HOOD LATCH SUPPORT)
INSIDE AIR TEMPERATURE SENSOR (ABOVE GLOVE BOX)
VACUUM/ELECTRIC SOLENOID (NEAR CENTER OF I/P)
HOT IN RUN
PRI FAN FUSE 10A
UNDERHOOD ELECTRICAL CENTER
DATA LINK CONNECTOR (RIGHT OF STEERING COLUMN)
SUNLOAD TEMPERATURE SENSOR (TOP CENTER OF I/P)
A/C COMPRESSOR RELAY (IN UNDERHOOD ELECTRICAL CENTER)
LOGIC
AIR MIX MOTOR (ATTACHED TO LEFT SIDE OF PLENUM)
A/C CYCLING SWITCH (RIGHT REAR OF ENGINE COMPARTMENT, ON ACCUMULATOR)
A/C COMPRESSOR CLUTCH DIODE
A/C COMPRESSOR CLUTCH
HOT AT ALL TIMES
HOT IN RUN
HOT AT ALL TIMES
MAXI FUSE 12 40A
SEC FAN FUSE 10A
MAXI FUSE 13 40A
UNDERHOOD ELECTRICAL CENTER
G112 (FRONT OF LEFT CYLINDER HEAD)
PRIMARY ENGINE COOLANT FAN RELAY (BASE AND V03) (UNDERHOOD ELECTRICAL CENTER)
SECONDARY ENGINE COOLANT FAN RELAY (UNDERHOOD ELECTRICAL CENTER)
POWERTRAIN CONTROL MODULE (BEHIND RIGHT SIDE OF I/P)
RELAY CTRL
A/C REQUEST
A/C ON SIGNAL
PRESS SW INPUT
IDLE SPEED CONTROL POWER STEERING PRESSURE SWITCH (NEAR POWER STEERING UNIT)
PRIMARY COOLANT FAN MOTOR (BASE AND V03)
SECONDARY COOLANT FAN MOTOR
G112 (FRONT OF LEFT CYLINDER HEAD)
G109 (BEHIND RIGHT HEADLAMP ATTACHED TO RADIATOR SUPPORT)
70045
©1995 VFTC

Fig. 1: Air Conditioning Circuits, Auto A/C

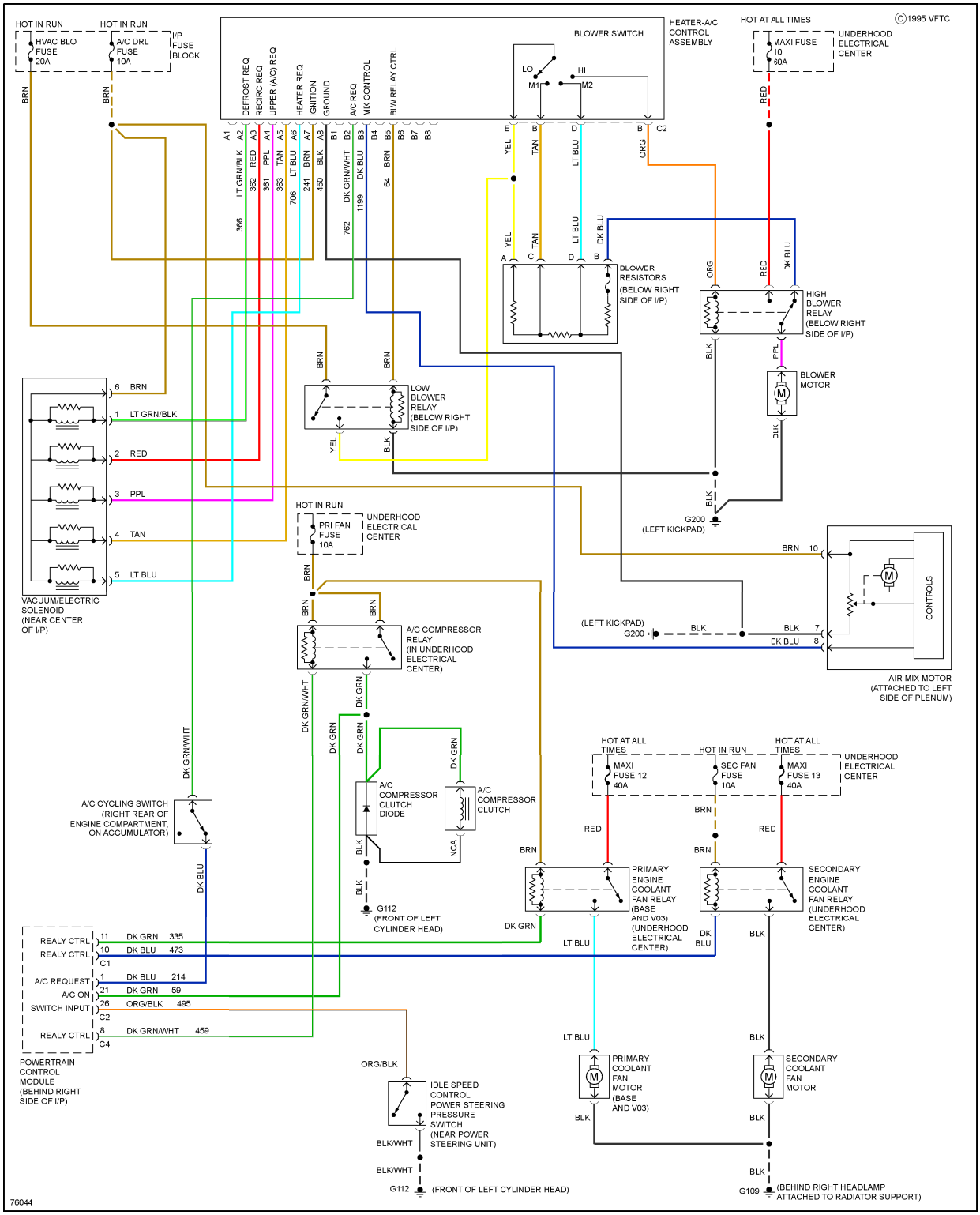
HOT IN RUN
HVAC BLO FUSE 20A
A/C DRL FUSE 10A
I/P FUSE BLOCK
DEFROST REQ
RECIRC REQ
UPPER (A/C) REQ
HEATER REQ
IGNITION
GROUND
A/C REQ
MIX CONTROL
BLW RELAY CTRL
BLOWER SWITCH
LO
HI
M1
M2
HEATER-A/C CONTROL ASSEMBLY
HOT AT ALL TIMES
©1995 VFTC
MAXI FUSE 10 60A
UNDERHOOD ELECTRICAL CENTER
BLOWER RESISTORS (BELOW RIGHT SIDE OF I/P)
HIGH BLOWER RELAY (BELOW RIGHT SIDE OF I/P)
BLOWER MOTOR
LOW BLOWER RELAY (BELOW RIGHT SIDE OF I/P)
VACUUM/ELECTRIC SOLENOID (NEAR CENTER OF I/P)
6 BRN
1 LT GRN/BLK
2 RED
3 PPL
4 TAN
5 LT BLU
G200 (LEFT KICKPAD)
PRI FAN FUSE 10A
A/C COMPRESSOR RELAY (IN UNDERHOOD ELECTRICAL CENTER)
CONTROLS
AIR MIX MOTOR (ATTACHED TO LEFT SIDE OF PLENUM)
A/C CYCLING SWITCH (RIGHT REAR OF ENGINE COMPARTMENT, ON ACCUMULATOR)
A/C COMPRESSOR CLUTCH DIODE
A/C COMPRESSOR CLUTCH
G112 (FRONT OF LEFT CYLINDER HEAD)
MAXI FUSE 12 40A
SEC FAN FUSE 10A
MAXI FUSE 13 40A
PRIMARY ENGINE COOLANT FAN RELAY (BASE AND V03) (UNDERHOOD ELECTRICAL CENTER)
SECONDARY ENGINE COOLANT FAN RELAY (UNDERHOOD ELECTRICAL CENTER)
REALY CTRL 11 DK GRN 335
REALY CTRL 10 DK BLU 473
A/C REQUEST 1 DK BLU 214
A/C ON 21 DK GRN 59
SWITCH INPUT 26 ORG/BLK 495
REALY CTRL 8 DK GRN/WHT 459
POWERTRAIN CONTROL MODULE (BEHIND RIGHT SIDE OF I/P)
IDLE SPEED CONTROL POWER STEERING PRESSURE SWITCH (NEAR POWER STEERING UNIT)
PRIMARY COOLANT FAN MOTOR (BASE AND V03)
SECONDARY COOLANT FAN MOTOR
G109 (BEHIND RIGHT HEADLAMP ATTACHED TO RADIATOR SUPPORT)
76044

Fig. 2: Air Conditioning Circuits, Manual A/C

ANTI-LOCK BRAKES

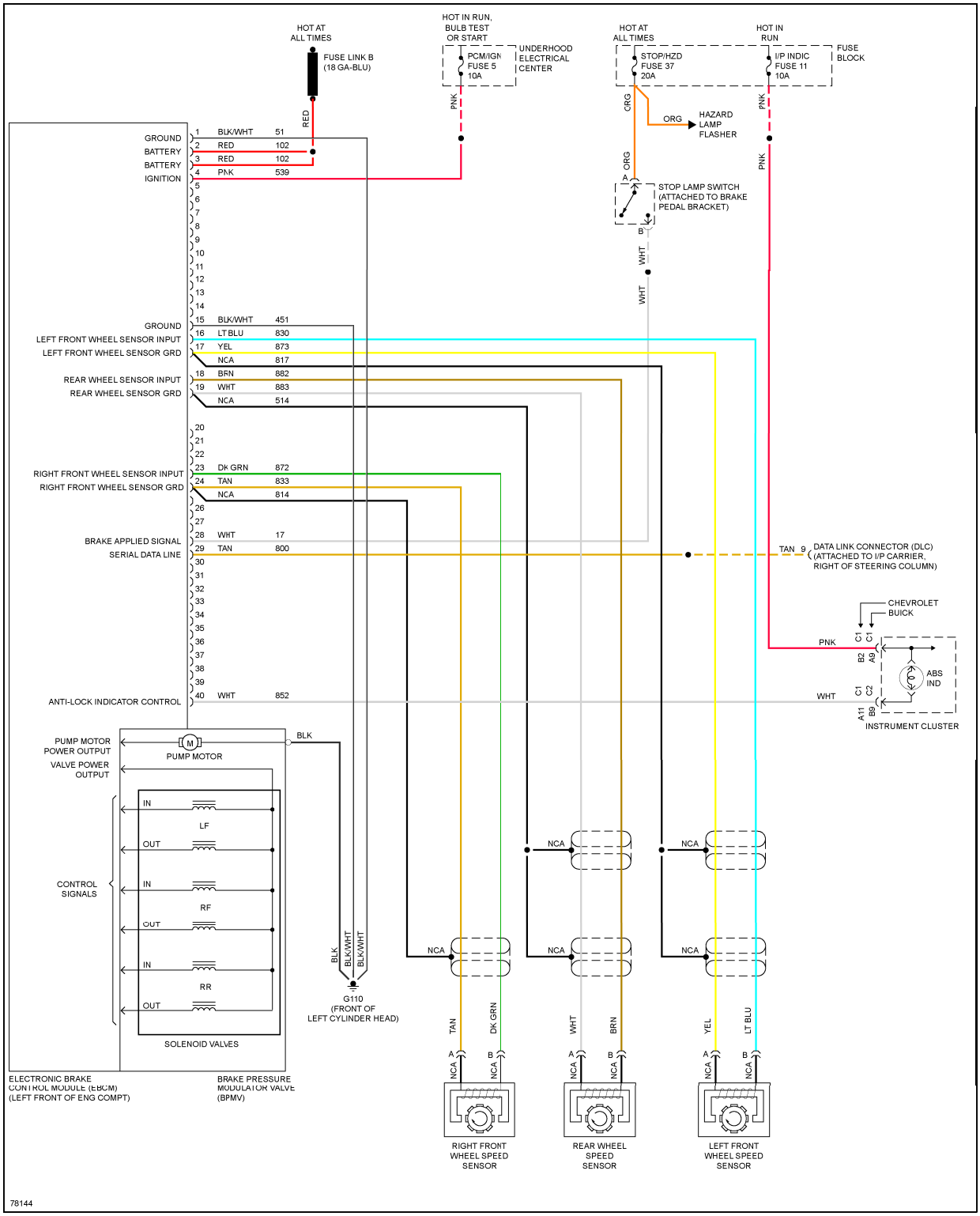
HOT AT ALL TIMES
FUSE LINK B (18 GA-BLU)
HOT IN RUN, BULB TEST OR START
PCM/IGN FUSE 5 10A
UNDERHOOD ELECTRICAL CENTER
HOT AT ALL TIMES
STOP/HZD FUSE 37 20A
HOT IN RUN
I/P INDIC FUSE 11 10A
FUSE BLOCK
HAZARD LAMP FLASHER
STOP LAMP SWITCH (ATTACHED TO BRAKE PEDAL BRACKET)
GROUND
BATTERY
BATTERY
IGNITION
GROUND
LEFT FRONT WHEEL SENSOR INPUT
LEFT FRONT WHEEL SENSOR GRD
REAR WHEEL SENSOR INPUT
REAR WHEEL SENSOR GRD
RIGHT FRONT WHEEL SENSOR INPUT
RIGHT FRONT WHEEL SENSOR GRD
BRAKE APPLIED SIGNAL
SERIAL DATA LINE
ANTI-LOCK INDICATOR CONTROL
DATA LINK CONNECTOR (DLC) (ATTACHED TO I/P CARRIER, RIGHT OF STEERING COLUMN)
CHEVROLET
BUICK
ABS IND
INSTRUMENT CLUSTER
PUMP MOTOR POWER OUTPUT
PUMP MOTOR
VALVE POWER OUTPUT
CONTROL SIGNALS
SOLENOID VALVES
G110 (FRONT OF LEFT CYLINDER HEAD)
ELECTRONIC BRAKE CONTROL MODULE (EBCM) (LEFT FRONT OF ENG COMPT)
BRAKE PRESSURE MODULATOR VALVE (BPMV)
RIGHT FRONT WHEEL SPEED SENSOR
REAR WHEEL SPEED SENSOR
LEFT FRONT WHEEL SPEED SENSOR
78144

Fig. 3: Anti-lock Brake Circuits

ANTI-THEFT

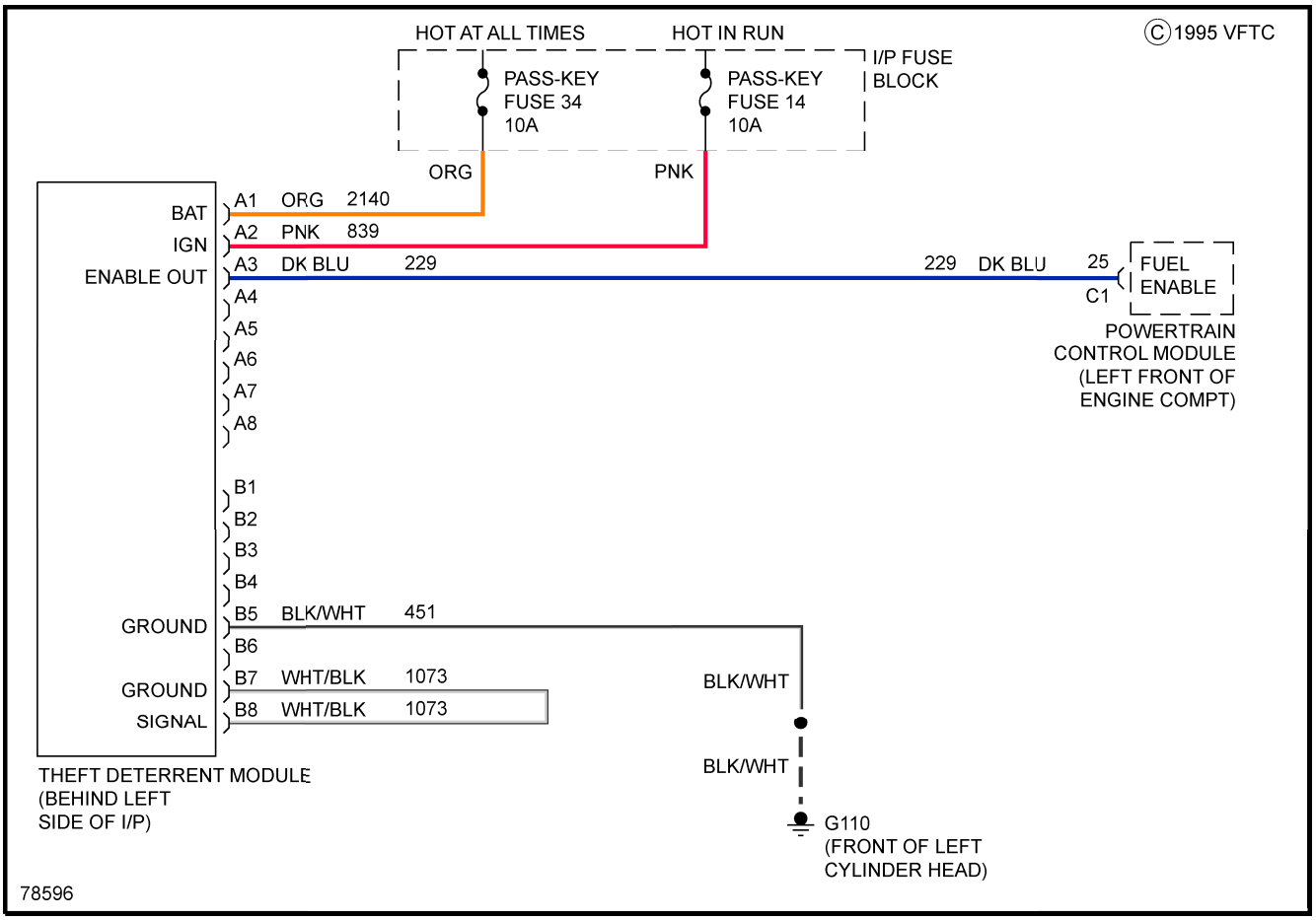
HOT AT ALL TIMES
HOT IN RUN
©1995 VFTC
PASS-KEY FUSE 34 10A
PASS-KEY FUSE 14 10A
I/P FUSE BLOCK
ORG
PNK
BAT
IGN
ENABLE OUT
A1 ORG 2140
A2 PNK 839
A3 DK BLU 229
229 DK BLU 25
C1
FUEL ENABLE
POWERTRAIN CONTROL MODULE (LEFT FRONT OF ENGINE COMPT)
A4
A5
A6
A7
A8
B1
B2
B3
B4
GROUND
B5 BLK/WHT 451
B6
GROUND
B7 WHT/BLK 1073
SIGNAL
B8 WHT/BLK 1073
BLK/WHT
BLK/WHT
G110 (FRONT OF LEFT CYLINDER HEAD)
THEFT DETERRENT MODULE (BEHIND LEFT SIDE OF I/P)
78596

Fig. 4: Pass-Key Circuit, W/ SEO

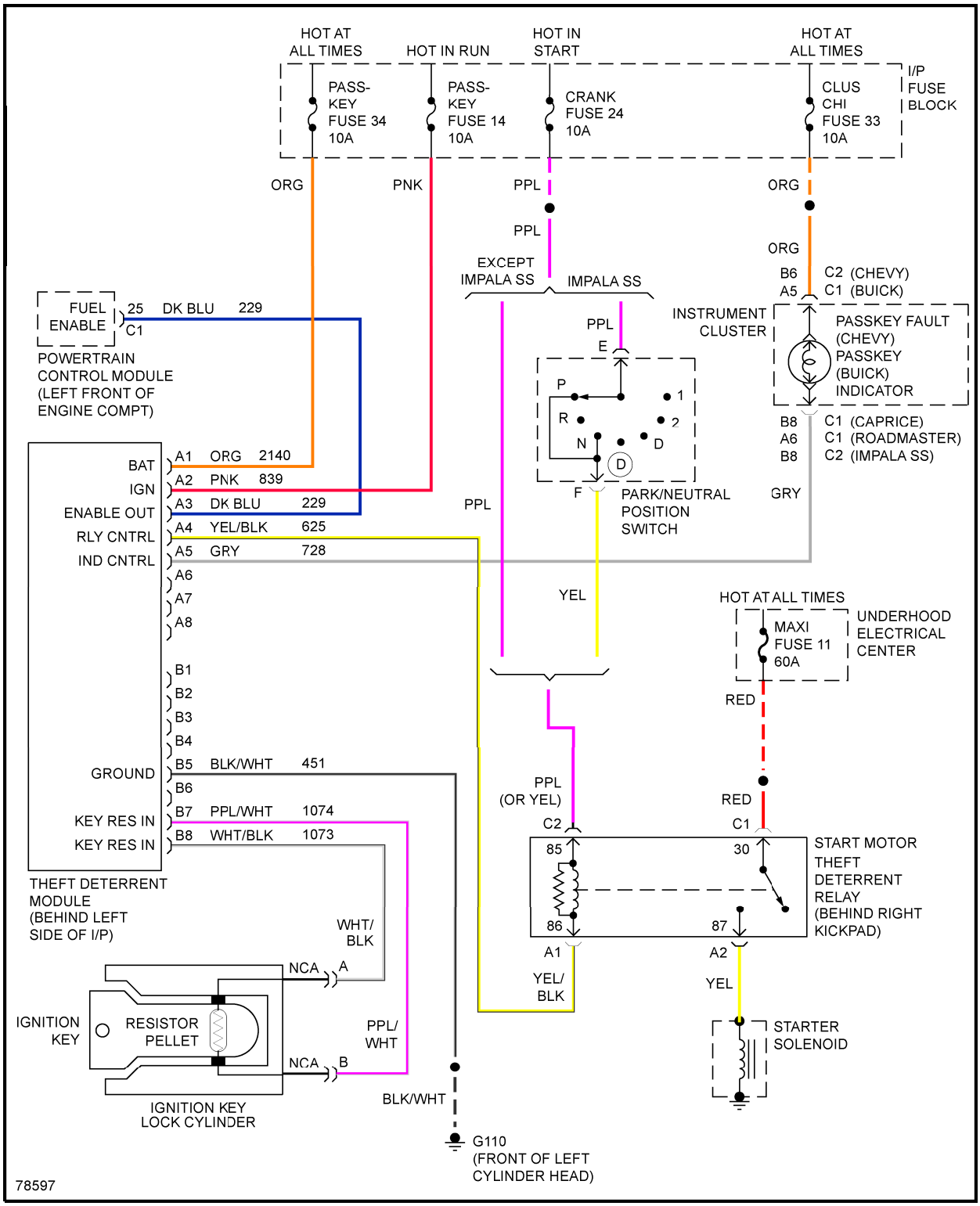
HOT AT ALL TIMES
HOT IN RUN
HOT IN START
HOT AT ALL TIMES
PASS-KEY FUSE 34 10A
PASS-KEY FUSE 14 10A
CRANK FUSE 24 10A
CLUS CHI FUSE 33 10A
I/P FUSE BLOCK
ORG
PNK
PPL
ORG
PPL
ORG
EXCEPT IMPALA SS
IMPALA SS
B6 C2 (CHEVY)
A5 C1 (BUICK)
FUEL ENABLE
25 DK BLU 229
C1
POWERTRAIN CONTROL MODULE (LEFT FRONT OF ENGINE COMPT)
PPL
E
INSTRUMENT CLUSTER
PASSKEY FAULT (CHEVY) PASSKEY (BUICK) INDICATOR
P
R
N
D
1
2
D
B8 C1 (CAPRICE)
A6 C1 (ROADMASTER)
B8 C2 (IMPALA SS)
BAT
A1 ORG 2140
IGN
A2 PNK 839
ENABLE OUT
A3 DK BLU 229
RLY CNTRL
A4 YEL/BLK 625
IND CNTRL
A5 GRY 728
A6
A7
A8
F
PARK/NEUTRAL POSITION SWITCH
GRY
PPL
YEL
HOT AT ALL TIMES
MAXI FUSE 11 60A
UNDERHOOD ELECTRICAL CENTER
RED
B1
B2
B3
B4
GROUND
B5 BLK/WHT 451
B6
KEY RES IN
B7 PPL/WHT 1074
KEY RES IN
B8 WHT/BLK 1073
PPL (OR YEL)
RED
C2
C1
85
30
86
87
START MOTOR THEFT DETERRENT RELAY (BEHIND RIGHT KICKPAD)
THEFT DETERRENT MODULE (BEHIND LEFT SIDE OF I/P)
WHT/BLK
NCA
A
A1
A2
YEL/BLK
YEL
IGNITION KEY
RESISTOR PELLET
PPL/WHT
NCA
B
STARTER SOLENOID
IGNITION KEY LOCK CYLINDER
BLK/WHT
G110 (FRONT OF LEFT CYLINDER HEAD)
78597

Fig. 5: Pass-Key Circuit, W/O SEO

COMPUTER DATA LINES

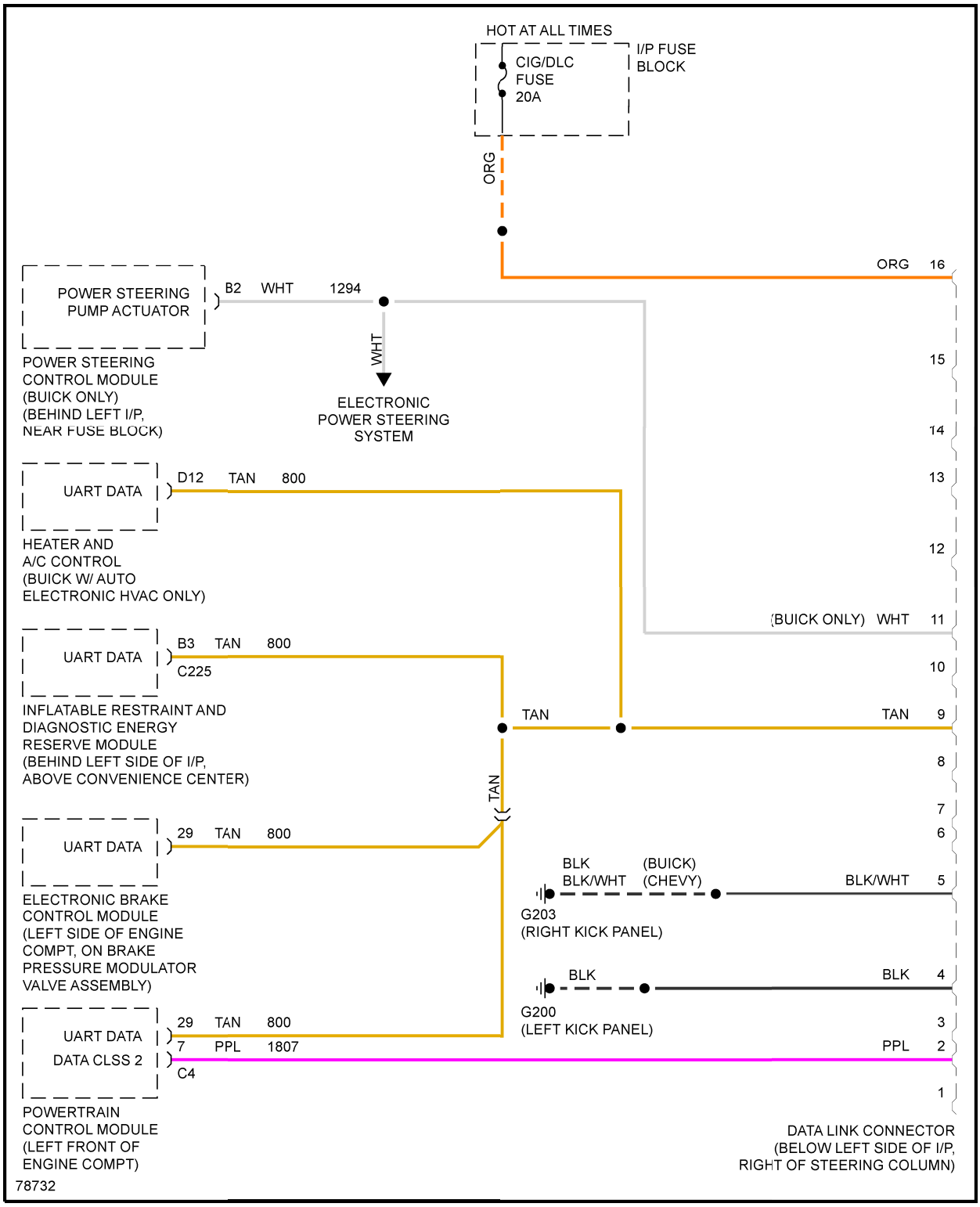
HOT AT ALL TIMES
CIG/DLC FUSE 20A
I/P FUSE BLOCK
ORG
ORG 16
POWER STEERING PUMP ACTUATOR
B2 WHT 1294
WHT
ELECTRONIC POWER STEERING SYSTEM
POWER STEERING CONTROL MODULE (BUICK ONLY) (BEHIND LEFT I/P, NEAR FUSE BLOCK)
15
14
UART DATA
D12 TAN 800
13
HEATER AND A/C CONTROL (BUICK W/ AUTO ELECTRONIC HVAC ONLY)
12
(BUICK ONLY) WHT 11
UART DATA
B3 TAN 800
C225
10
INFLATABLE RESTRAINT AND DIAGNOSTIC ENERGY RESERVE MODULE (BEHIND LEFT SIDE OF I/P, ABOVE CONVENIENCE CENTER)
TAN
TAN 9
8
TAN
7
UART DATA
29 TAN 800
6
ELECTRONIC BRAKE CONTROL MODULE (LEFT SIDE OF ENGINE COMPT, ON BRAKE PRESSURE MODULATOR VALVE ASSEMBLY)
BLK
BLK/WHT
(BUICK)
(CHEVY)
BLK/WHT 5
G203
(RIGHT KICK PANEL)
BLK
BLK 4
G200
(LEFT KICK PANEL)
3
UART DATA
DATA CLSS 2
29 TAN 800
7 PPL 1807
C4
PPL 2
1
POWERTRAIN CONTROL MODULE (LEFT FRONT OF ENGINE COMPT)
DATA LINK CONNECTOR (BELOW LEFT SIDE OF I/P, RIGHT OF STEERING COLUMN)
78732

Fig. 6: Computer Data Lines

COOLING FAN

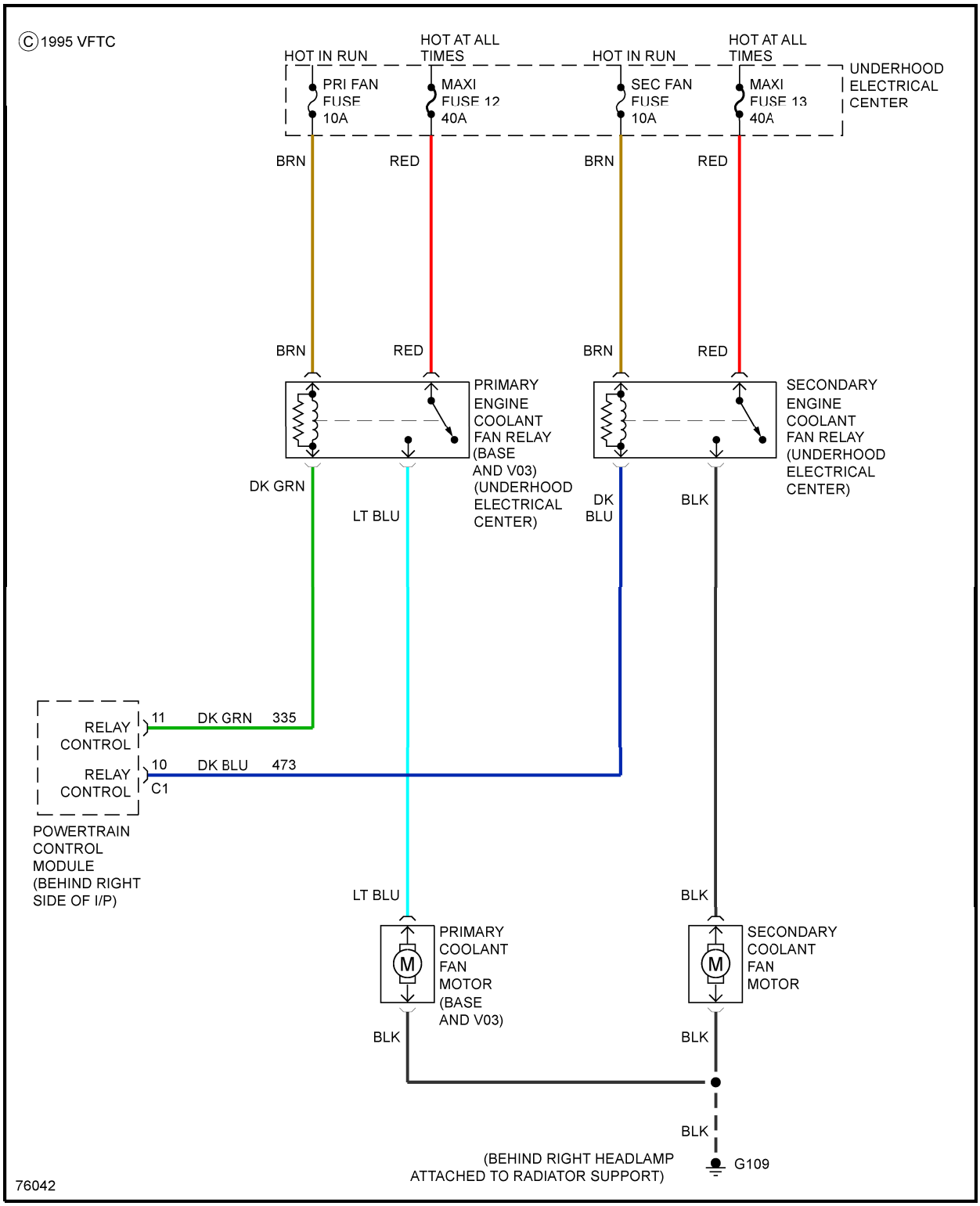
©1995 VFTC
HOT IN RUN
HOT AT ALL TIMES
HOT IN RUN
HOT AT ALL TIMES
UNDERHOOD ELECTRICAL CENTER
PRI FAN FUSE 10A
MAXI FUSE 12 40A
SEC FAN FUSE 10A
MAXI FUSE 13 40A
BRN
RED
BRN
RED
BRN
RED
BRN
RED
PRIMARY ENGINE COOLANT FAN RELAY (BASE AND V03) (UNDERHOOD ELECTRICAL CENTER)
SECONDARY ENGINE COOLANT FAN RELAY (UNDERHOOD ELECTRICAL CENTER)
DK GRN
LT BLU
DK BLU
BLK
RELAY CONTROL
11
DK GRN
335
RELAY CONTROL
10
DK BLU
473
C1
POWERTRAIN CONTROL MODULE (BEHIND RIGHT SIDE OF I/P)
LT BLU
BLK
PRIMARY COOLANT FAN MOTOR (BASE AND V03)
SECONDARY COOLANT FAN MOTOR
M
M
BLK
BLK
BLK
(BEHIND RIGHT HEADLAMP ATTACHED TO RADIATOR SUPPORT)
G109
76042

Fig. 7: Cooling Fan Circuit

CRUISE CONTROL

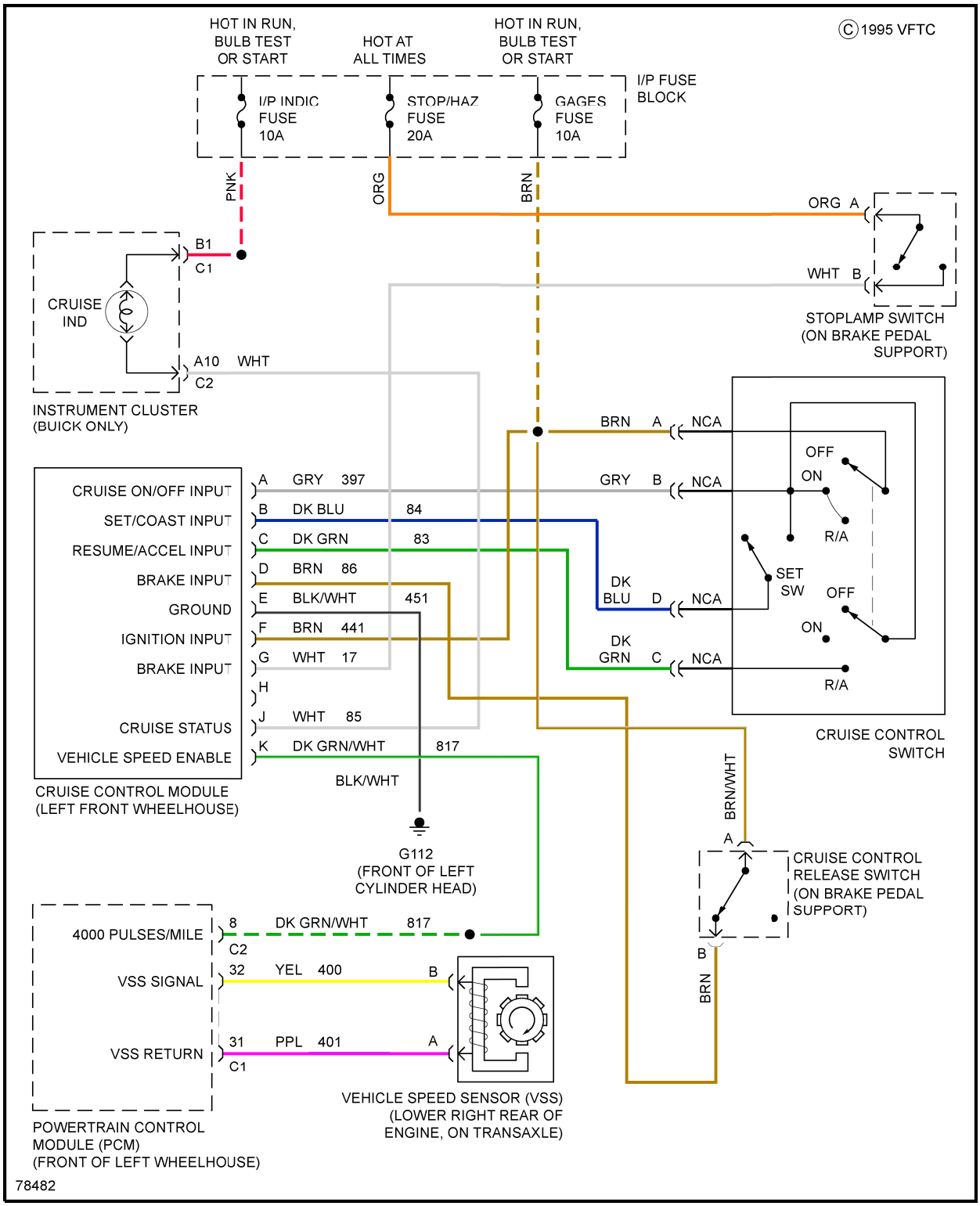
HOT IN RUN, BULB TEST OR START
HOT AT ALL TIMES
HOT IN RUN, BULB TEST OR START
© 1995 VFTC
I/P FUSE BLOCK
I/P INDIC FUSE 10A
STOP/HAZ FUSE 20A
GAGES FUSE 10A
PNK
ORG
BRN
ORG A
WHT B
STOPLAMP SWITCH (ON BRAKE PEDAL SUPPORT)
B1
C1
CRUISE IND
A10 WHT
C2
INSTRUMENT CLUSTER (BUICK ONLY)
BRN A NCA
GRY B NCA
DK BLU D NCA
DK GRN C NCA
OFF
ON
R/A
SET SW
OFF
ON
R/A
CRUISE CONTROL SWITCH
CRUISE ON/OFF INPUT
SET/COAST INPUT
RESUME/ACCEL INPUT
BRAKE INPUT
GROUND
IGNITION INPUT
BRAKE INPUT
CRUISE STATUS
VEHICLE SPEED ENABLE
A GRY 397
B DK BLU 84
C DK GRN 83
D BRN 86
E BLK/WHT 451
F BRN 441
G WHT 17
H
J WHT 85
K DK GRN/WHT 817
CRUISE CONTROL MODULE (LEFT FRONT WHEELHOUSE)
BLK/WHT
G112 (FRONT OF LEFT CYLINDER HEAD)
BRN/WHT
A
CRUISE CONTROL RELEASE SWITCH (ON BRAKE PEDAL SUPPORT)
B
BRN
4000 PULSES/MILE
8 DK GRN/WHT 817
C2
VSS SIGNAL
32 YEL 400 B
VSS RETURN
31 PPL 401 A
C1
VEHICLE SPEED SENSOR (VSS) (LOWER RIGHT REAR OF ENGINE, ON TRANSAXLE)
POWERTRAIN CONTROL MODULE (PCM) (FRONT OF LEFT WHEELHOUSE)
78482

Fig. 8: Cruise Control Circuit

DEFOGGERS

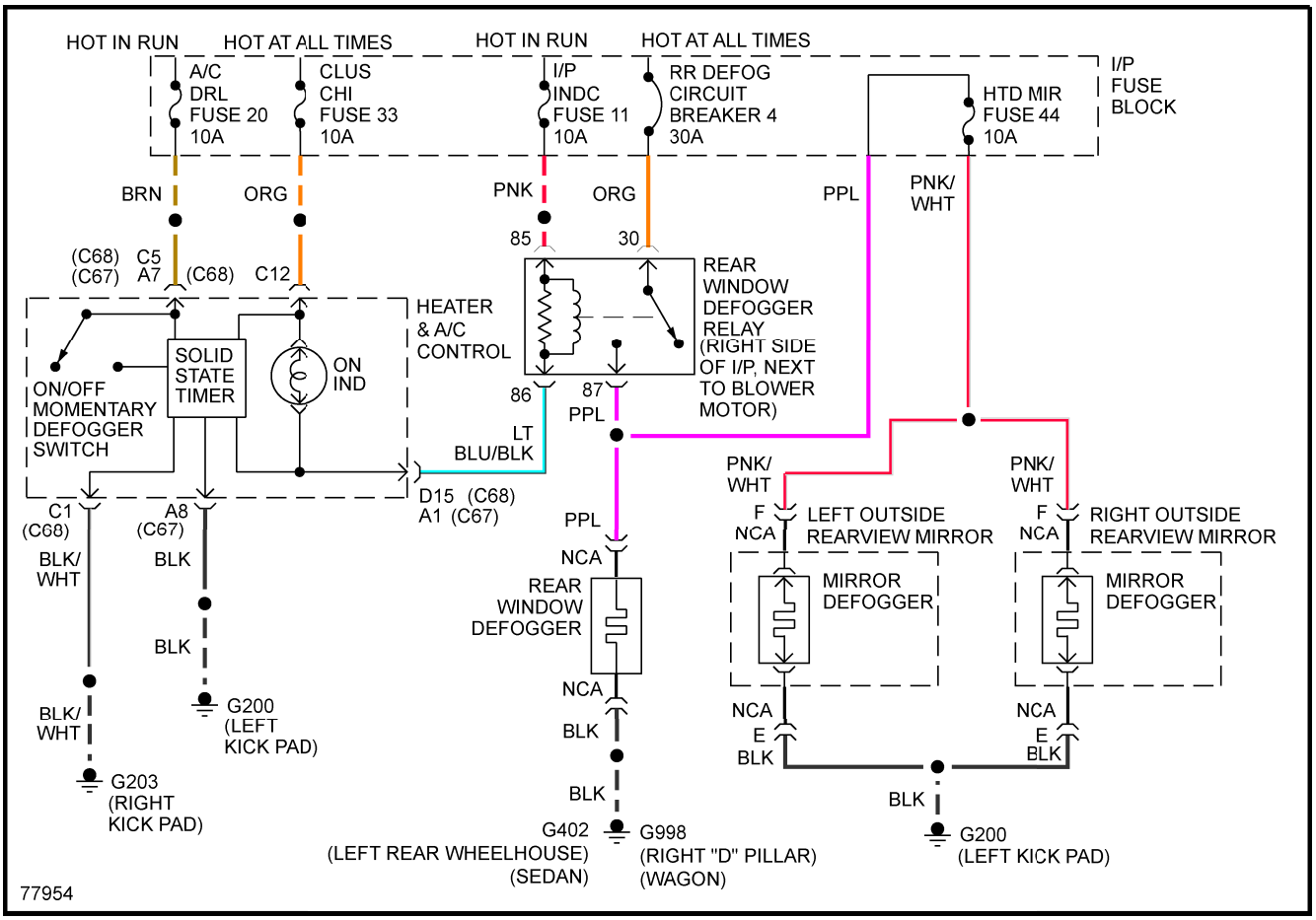
HOT IN RUN
HOT AT ALL TIMES
HOT IN RUN
HOT AT ALL TIMES
A/C DRL FUSE 20 10A
CLUS CHI FUSE 33 10A
I/P INDC FUSE 11 10A
RR DEFOG CIRCUIT BREAKER 4 30A
HTD MIR FUSE 44 10A
I/P FUSE BLOCK
BRN
ORG
PNK
ORG
PPL
PNK/ WHT
85
30
(C68) (C67) C5 A7
(C68) C12
HEATER & A/C CONTROL
SOLID STATE TIMER
ON IND
ON/OFF MOMENTARY DEFOGGER SWITCH
REAR WINDOW DEFOGGER RELAY (RIGHT SIDE OF I/P, NEXT TO BLOWER MOTOR)
86
87
PPL
LT BLU/BLK
D15 (C68) A1 (C67)
C1 (C68)
A8 (C67)
BLK/ WHT
BLK
BLK
BLK/ WHT
G200 (LEFT KICK PAD)
G203 (RIGHT KICK PAD)
PPL
NCA
REAR WINDOW DEFOGGER
NCA
BLK
BLK
G402 (LEFT REAR WHEELHOUSE) (SEDAN)
G998 (RIGHT "D" PILLAR) (WAGON)
PNK/ WHT
F NCA
LEFT OUTSIDE REARVIEW MIRROR
MIRROR DEFOGGER
NCA
E BLK
PNK/ WHT
F NCA
RIGHT OUTSIDE REARVIEW MIRROR
MIRROR DEFOGGER
NCA
E BLK
BLK
G200 (LEFT KICK PAD)
77954

Fig. 9: Defogger Circuit

ELECTRONIC POWER STEERING

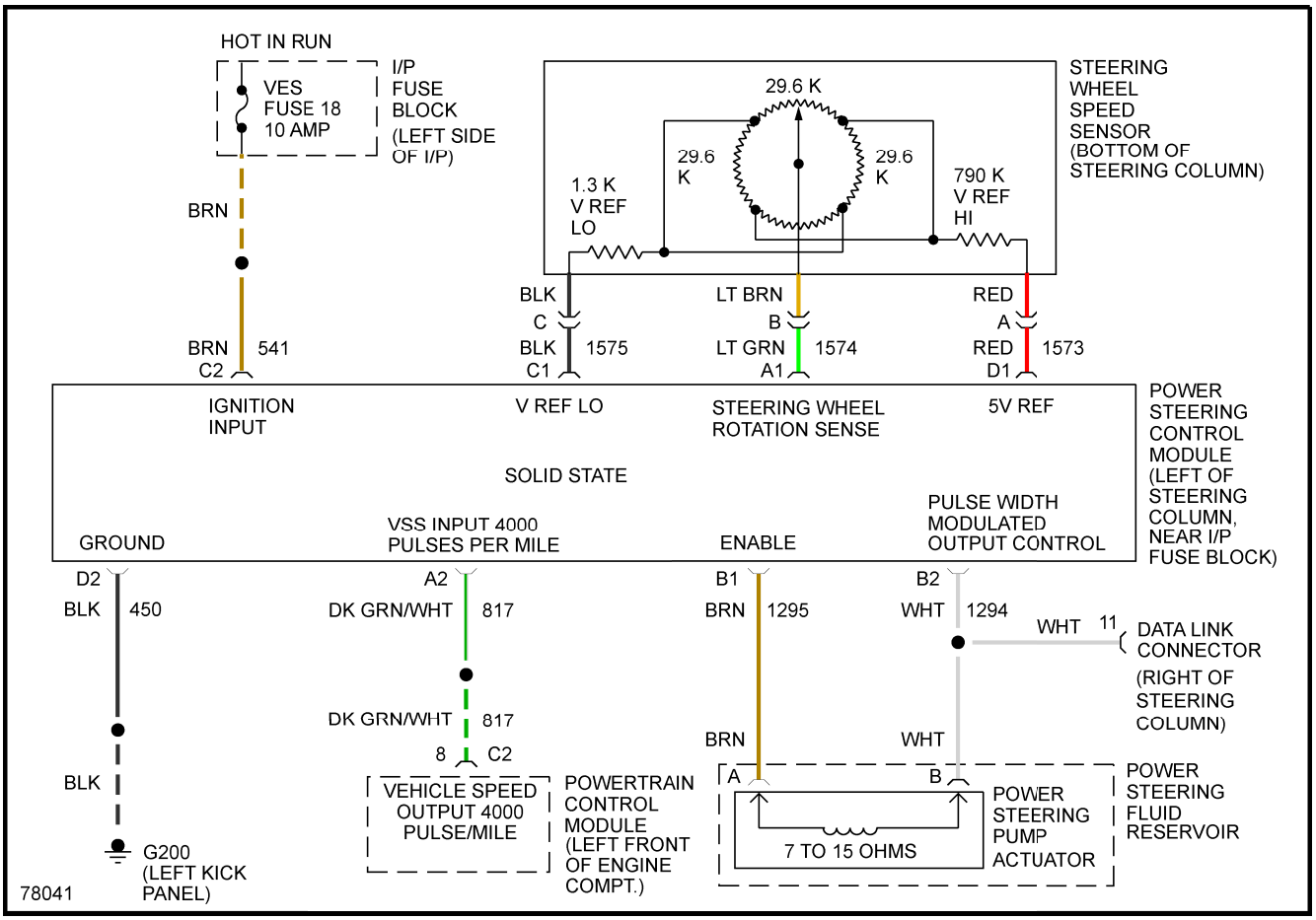
HOT IN RUN
VES
FUSE 18
10 AMP
I/P
FUSE
BLOCK
(LEFT SIDE
OF I/P)
BRN
BRN
C2
541
STEERING
WHEEL
SPEED
SENSOR
(BOTTOM OF
STEERING COLUMN)
29.6 K
29.6
K
29.6
K
1.3 K
V REF
LO
790 K
V REF
HI
BLK
C
BLK
C1
1575
LT BRN
B
LT GRN
A1
1574
RED
A
RED
D1
1573
IGNITION
INPUT
V REF LO
STEERING WHEEL
ROTATION SENSE
5V REF
POWER
STEERING
CONTROL
MODULE
(LEFT OF
STEERING
COLUMN,
NEAR I/P
FUSE BLOCK)
SOLID STATE
GROUND
VSS INPUT 4000
PULSES PER MILE
ENABLE
PULSE WIDTH
MODULATED
OUTPUT CONTROL
D2
BLK
450
A2
DK GRN/WHT
817
B1
BRN
1295
B2
WHT
1294
WHT
11
DATA LINK
CONNECTOR
(RIGHT OF
STEERING
COLUMN)
DK GRN/WHT
817
8
C2
BRN
WHT
BLK
VEHICLE SPEED
OUTPUT 4000
PULSE/MILE
POWERTRAIN
CONTROL
MODULE
(LEFT FRONT
OF ENGINE
COMPT.)
A
B
7 TO 15 OHMS
POWER
STEERING
PUMP
ACTUATOR
POWER
STEERING
FLUID
RESERVOIR
G200
(LEFT KICK
PANEL)
78041

Fig. 10: Electronic Power Steering Circuit

ELECTRONIC SUSPENSION

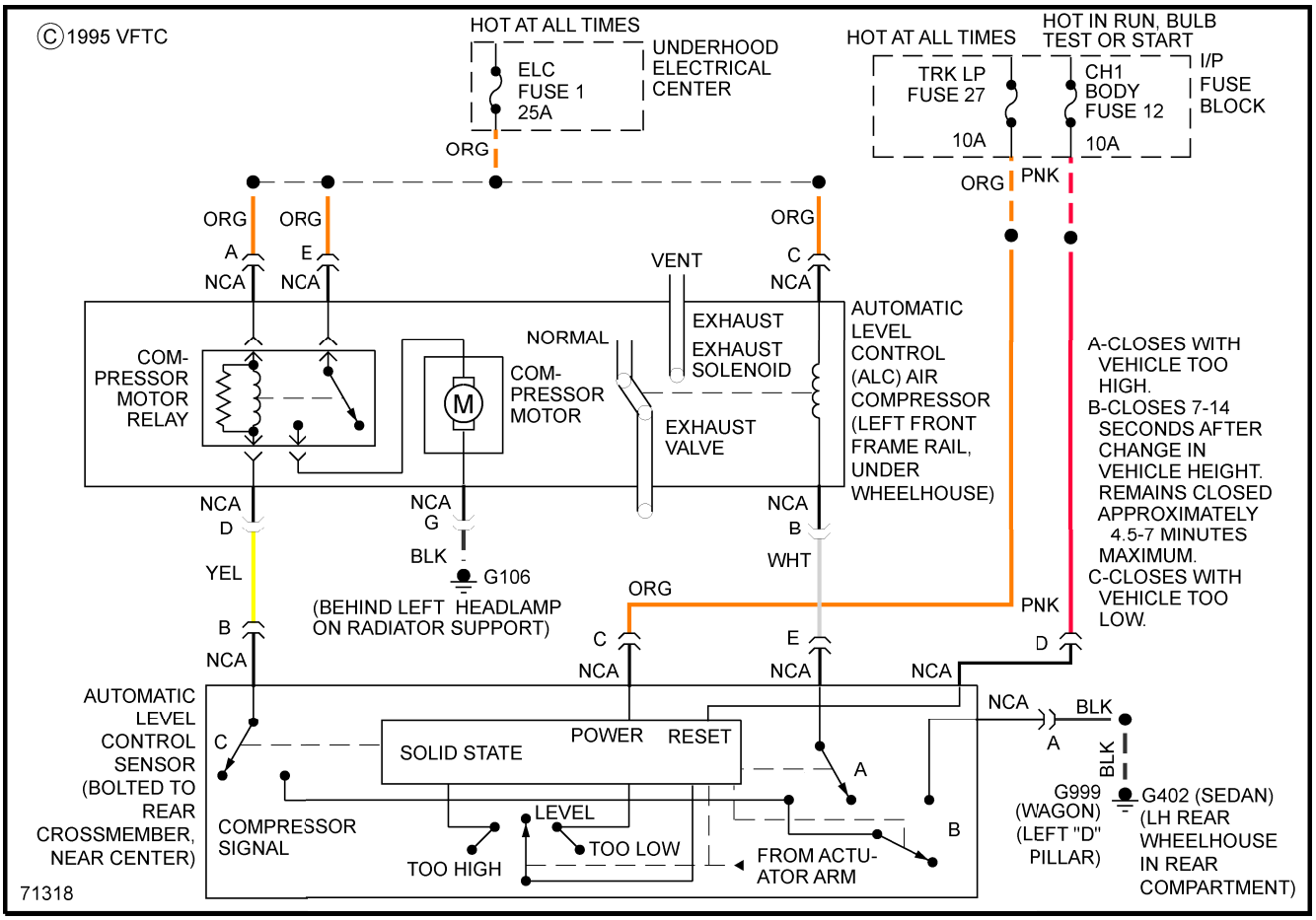
©1995 VFTC
HOT AT ALL TIMES
ELC FUSE 1 25A
UNDERHOOD ELECTRICAL CENTER
HOT AT ALL TIMES
TRK LP FUSE 27
10A
HOT IN RUN, BULB TEST OR START
CH1 BODY FUSE 12
10A
I/P FUSE BLOCK
ORG
ORG
PNK
ORG
ORG
ORG
A
NCA
E
NCA
VENT
C
NCA
EXHAUST
EXHAUST SOLENOID
NORMAL
COM-PRESSOR MOTOR RELAY
M
COM-PRESSOR MOTOR
EXHAUST VALVE
AUTOMATIC LEVEL CONTROL (ALC) AIR COMPRESSOR (LEFT FRONT FRAME RAIL, UNDER WHEELHOUSE)
A-CLOSES WITH VEHICLE TOO HIGH.
B-CLOSES 7-14 SECONDS AFTER CHANGE IN VEHICLE HEIGHT. REMAINS CLOSED APPROXIMATELY 4.5-7 MINUTES MAXIMUM.
C-CLOSES WITH VEHICLE TOO LOW.
NCA
D
YEL
NCA
G
BLK
G106
(BEHIND LEFT HEADLAMP ON RADIATOR SUPPORT)
NCA
B
WHT
ORG
PNK
B
NCA
C
NCA
E
NCA
NCA
D
AUTOMATIC LEVEL CONTROL SENSOR (BOLTED TO REAR CROSSMEMBER, NEAR CENTER)
C
SOLID STATE
POWER
RESET
A
NCA
BLK
A
BLK
G999 (WAGON) (LEFT "D" PILLAR)
G402 (SEDAN) (LH REAR WHEELHOUSE IN REAR COMPARTMENT)
COMPRESSOR SIGNAL
LEVEL
TOO LOW
TOO HIGH
B
FROM ACTU-ATOR ARM
71318

Fig. 11: Electronic Level Control

ENGINE PERFORMANCE

5.7L

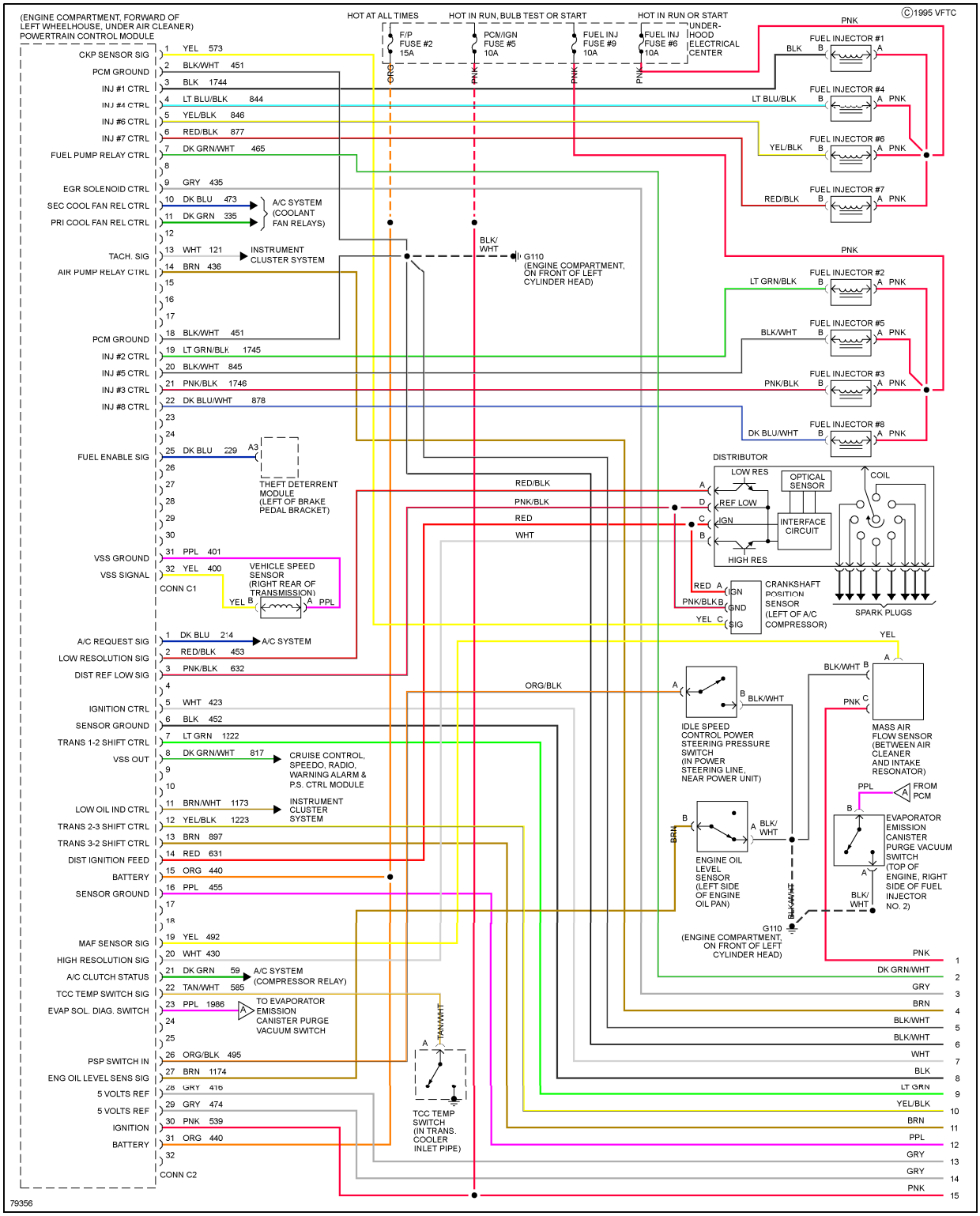
(ENGINE COMPARTMENT, FORWARD OF LEFT WHEELHOUSE, UNDER AIR CLEANER) POWERTRAIN CONTROL MODULE
©1995 VFTC
HOT AT ALL TIMES
HOT IN RUN, BULB TEST OR START
HOT IN RUN OR START
F/P FUSE #2 15A
PCM/IGN FUSE #5 10A
FUEL INJ FUSE #9 10A
FUEL INJ FUSE #6 10A
UNDER-HOOD ELECTRICAL CENTER
CKP SENSOR SIG
PCM GROUND
INJ #1 CTRL
INJ #4 CTRL
INJ #6 CTRL
INJ #7 CTRL
FUEL PUMP RELAY CTRL
EGR SOLENOID CTRL
SEC COOL FAN REL CTRL
PRI COOL FAN REL CTRL
TACH. SIG
AIR PUMP RELAY CTRL
INJ #2 CTRL
INJ #5 CTRL
INJ #3 CTRL
INJ #8 CTRL
FUEL ENABLE SIG
VSS GROUND
VSS SIGNAL
CONN C1
A/C REQUEST SIG
LOW RESOLUTION SIG
DIST REF LOW SIG
IGNITION CTRL
SENSOR GROUND
TRANS 1-2 SHIFT CTRL
VSS OUT
LOW OIL IND CTRL
TRANS 2-3 SHIFT CTRL
TRANS 3-2 SHIFT CTRL
DIST IGNITION FEED
BATTERY
SENSOR GROUND
MAF SENSOR SIG
HIGH RESOLUTION SIG
A/C CLUTCH STATUS
TCC TEMP SWITCH SIG
EVAP SOL. DIAG. SWITCH
PSP SWITCH IN
ENG OIL LEVEL SENS SIG
5 VOLTS REF
5 VOLTS REF
IGNITION
BATTERY
CONN C2
A/C SYSTEM (COOLANT FAN RELAYS)
INSTRUMENT CLUSTER SYSTEM
G110 (ENGINE COMPARTMENT, ON FRONT OF LEFT CYLINDER HEAD)
THEFT DETERRENT MODULE (LEFT OF BRAKE PEDAL BRACKET)
VEHICLE SPEED SENSOR (RIGHT REAR OF TRANSMISSION)
A/C SYSTEM
CRUISE CONTROL, SPEEDO, RADIO, WARNING ALARM & P.S. CTRL MODULE
INSTRUMENT CLUSTER SYSTEM
A/C SYSTEM (COMPRESSOR RELAY)
TO EVAPORATOR EMISSION CANISTER PURGE VACUUM SWITCH
TCC TEMP SWITCH (IN TRANS. COOLER INLET PIPE)
FUEL INJECTOR #1
FUEL INJECTOR #4
FUEL INJECTOR #6
FUEL INJECTOR #7
FUEL INJECTOR #2
FUEL INJECTOR #5
FUEL INJECTOR #3
FUEL INJECTOR #8
DISTRIBUTOR
LOW RES
OPTICAL SENSOR
REF LOW
IGN
INTERFACE CIRCUIT
HIGH RES
COIL
SPARK PLUGS
CRANKSHAFT POSITION SENSOR (LEFT OF A/C COMPRESSOR)
IDLE SPEED CONTROL POWER STEERING PRESSURE SWITCH (IN POWER STEERING LINE, NEAR POWER UNIT)
MASS AIR FLOW SENSOR (BETWEEN AIR CLEANER AND INTAKE RESONATOR)
FROM PCM
EVAPORATOR EMISSION CANISTER PURGE VACUUM SWITCH (TOP OF ENGINE, RIGHT SIDE OF FUEL INJECTOR NO. 2)
ENGINE OIL LEVEL SENSOR (LEFT SIDE OF ENGINE OIL PAN)
79356

Fig. 12: 5.7L (VIN P), Engine Performance Circuits (1 of 3)

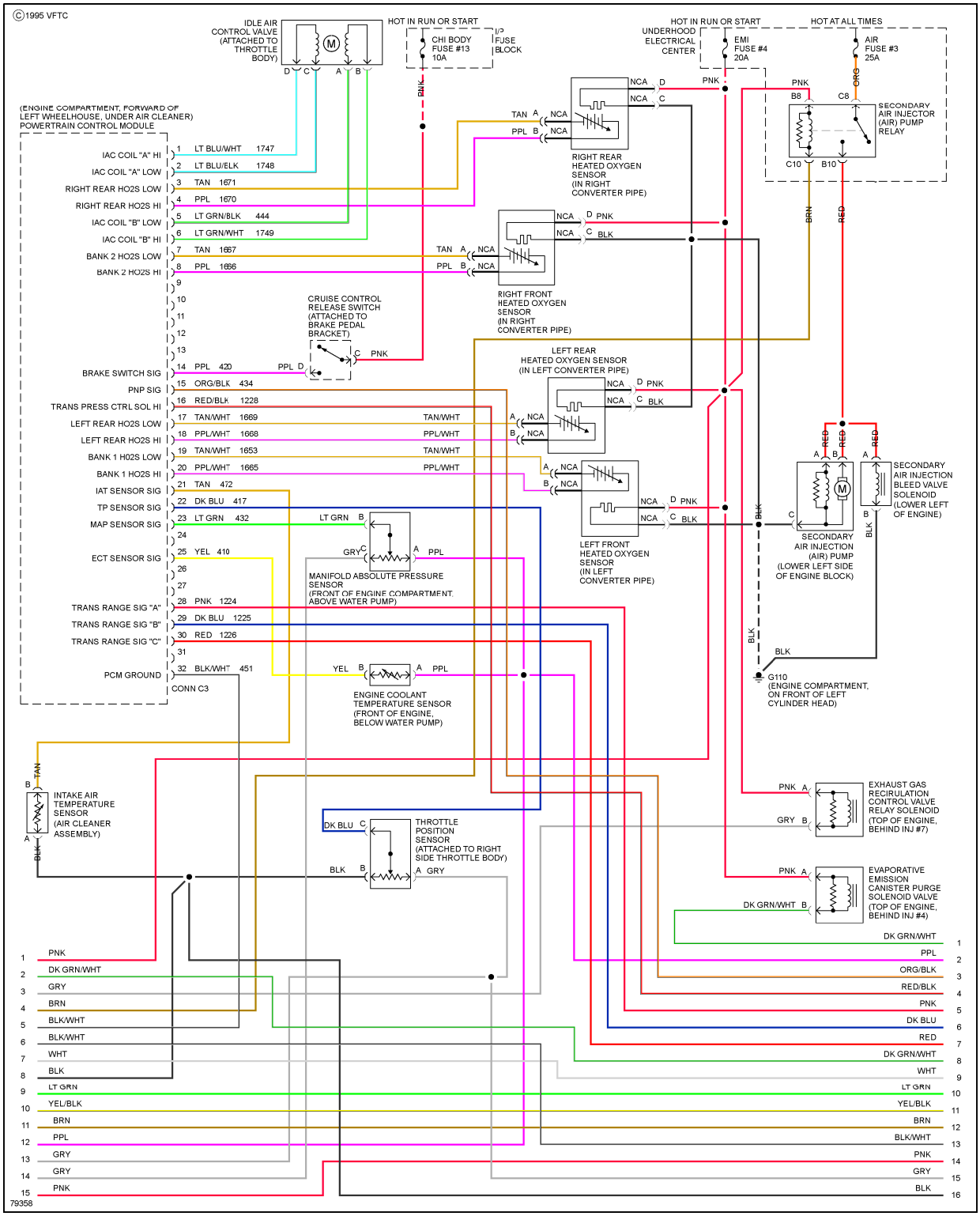
©1995 VFTC
IDLE AIR CONTROL VALVE (ATTACHED TO THROTTLE BODY)
HOT IN RUN OR START
CHI BODY FUSE #13 10A
I/P FUSE BLOCK
HOT IN RUN OR START
UNDERHOOD ELECTRICAL CENTER
EMI FUSE #4 20A
HOT AT ALL TIMES
AIR FUSE #3 25A
(ENGINE COMPARTMENT, FORWARD OF LEFT WHEELHOUSE, UNDER AIR CLEANER)
POWERTRAIN CONTROL MODULE
IAC COIL "A" HI
IAC COIL "A" LOW
RIGHT REAR HO2S LOW
RIGHT REAR HO2S HI
IAC COIL "B" LOW
IAC COIL "B" HI
BANK 2 HO2S LOW
BANK 2 HO2S HI
BRAKE SWITCH SIG
PNP SIG
TRANS PRESS CTRL SOL HI
LEFT REAR HO2S LOW
LEFT REAR HO2S HI
BANK 1 HO2S LOW
BANK 1 HO2S HI
IAT SENSOR SIG
TP SENSOR SIG
MAP SENSOR SIG
ECT SENSOR SIG
TRANS RANGE SIG "A"
TRANS RANGE SIG "B"
TRANS RANGE SIG "C"
PCM GROUND
CONN C3
RIGHT REAR HEATED OXYGEN SENSOR (IN RIGHT CONVERTER PIPE)
RIGHT FRONT HEATED OXYGEN SENSOR (IN RIGHT CONVERTER PIPE)
CRUISE CONTROL RELEASE SWITCH (ATTACHED TO BRAKE PEDAL BRACKET)
LEFT REAR HEATED OXYGEN SENSOR (IN LEFT CONVERTER PIPE)
LEFT FRONT HEATED OXYGEN SENSOR (IN LEFT CONVERTER PIPE)
SECONDARY AIR INJECTOR (AIR) PUMP RELAY
SECONDARY AIR INJECTION BLEED VALVE SOLENOID (LOWER LEFT OF ENGINE)
SECONDARY AIR INJECTION (AIR) PUMP (LOWER LEFT SIDE OF ENGINE BLOCK)
MANIFOLD ABSOLUTE PRESSURE SENSOR (FRONT OF ENGINE COMPARTMENT, ABOVE WATER PUMP)
ENGINE COOLANT TEMPERATURE SENSOR (FRONT OF ENGINE, BELOW WATER PUMP)
G110 (ENGINE COMPARTMENT, ON FRONT OF LEFT CYLINDER HEAD)
INTAKE AIR TEMPERATURE SENSOR (AIR CLEANER ASSEMBLY)
THROTTLE POSITION SENSOR (ATTACHED TO RIGHT SIDE THROTTLE BODY)
EXHAUST GAS RECIRULATION CONTROL VALVE RELAY SOLENOID (TOP OF ENGINE, BEHIND INJ #7)
EVAPORATIVE EMISSION CANISTER PURGE SOLENOID VALVE (TOP OF ENGINE, BEHIND INJ #4)
79358

Fig. 13: 5.7L (VIN P), Engine Performance Circuits (2 of 3)

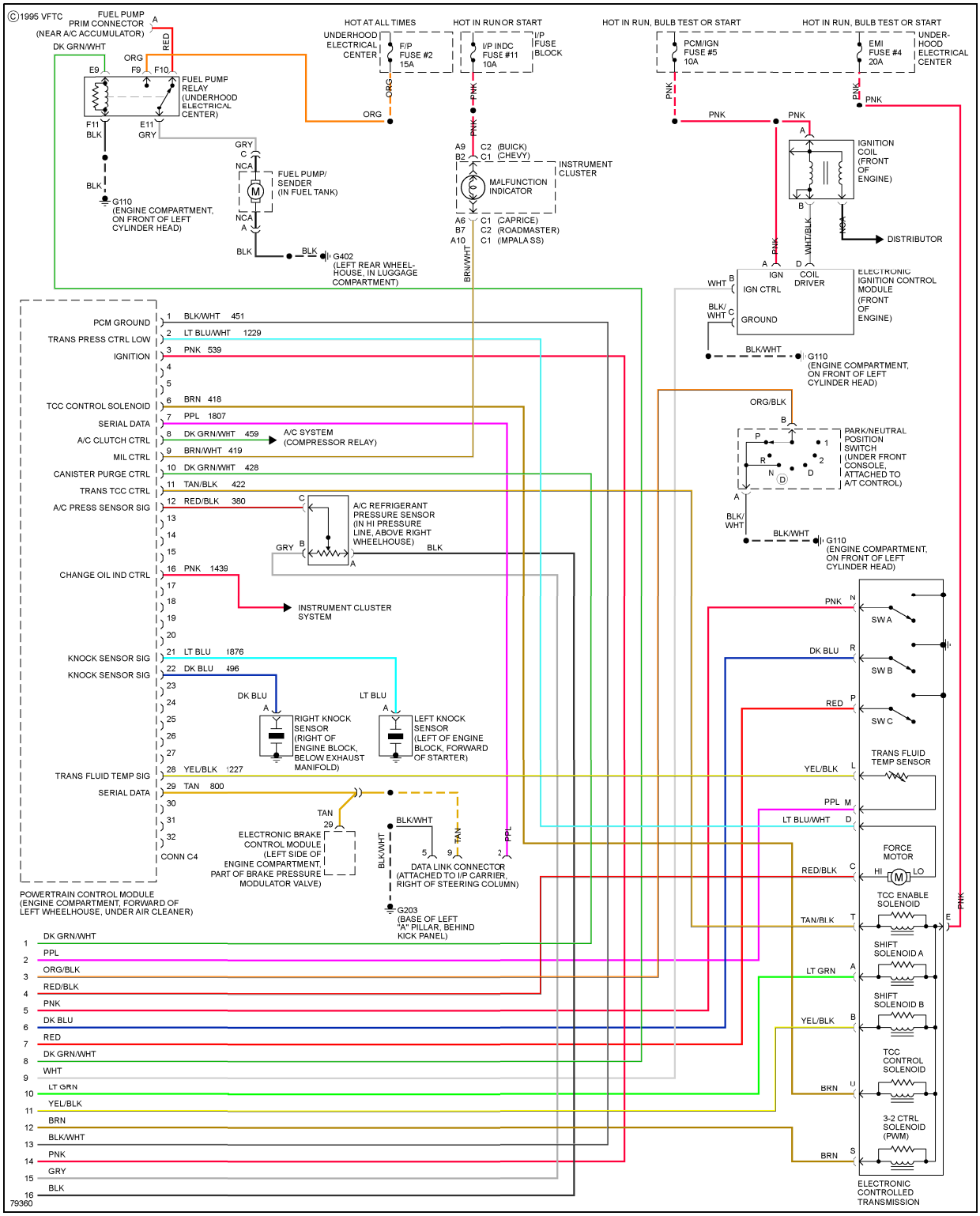
©1995 VFTC
FUEL PUMP PRIM CONNECTOR (NEAR A/C ACCUMULATOR)
DK GRN/WHT
RED
ORG
E9
F9
F10
FUEL PUMP RELAY (UNDERHOOD ELECTRICAL CENTER)
F11 BLK
E11 GRY
BLK
G110 (ENGINE COMPARTMENT, ON FRONT OF LEFT CYLINDER HEAD)
GRY
NCA
FUEL PUMP/ SENDER (IN FUEL TANK)
BLK
G402 (LEFT REAR WHEEL-HOUSE, IN LUGGAGE COMPARTMENT)
HOT AT ALL TIMES
UNDERHOOD ELECTRICAL CENTER
F/P FUSE #2 15A
HOT IN RUN OR START
I/P INDC FUSE #11 10A
I/P FUSE BLOCK
ORG
PNK
A9 C2 (BUICK)
B2 C1 (CHEVY)
INSTRUMENT CLUSTER
MALFUNCTION INDICATOR
A6 C1 (CAPRICE)
B7 C2 (ROADMASTER)
A10 C1 (MPALA SS)
BRN/WHT
HOT IN RUN, BULB TEST OR START
PCM/IGN FUSE #5 10A
EMI FUSE #4 20A
UNDER-HOOD ELECTRICAL CENTER
IGNITION COIL (FRONT OF ENGINE)
WHT/BLK
DISTRIBUTOR
IGN CTRL
COIL DRIVER
ELECTRONIC IGNITION CONTROL MODULE (FRONT OF ENGINE)
WHT
BLK/WHT
GROUND
G110 (ENGINE COMPARTMENT, ON FRONT OF LEFT CYLINDER HEAD)
ORG/BLK
PARK/NEUTRAL POSITION SWITCH (UNDER FRONT CONSOLE, ATTACHED TO A/T CONTROL)
PCM GROUND
TRANS PRESS CTRL LOW
IGNITION
TCC CONTROL SOLENOID
SERIAL DATA
A/C CLUTCH CTRL
MIL CTRL
CANISTER PURGE CTRL
TRANS TCC CTRL
A/C PRESS SENSOR SIG
CHANGE OIL IND CTRL
KNOCK SENSOR SIG
KNOCK SENSOR SIG
TRANS FLUID TEMP SIG
SERIAL DATA
CONN C4
1 BLK/WHT 451
2 LT BLU/WHT 1229
3 PNK 539
6 BRN 418
7 PPL 1807
8 DK GRN/WHT 459
A/C SYSTEM (COMPRESSOR RELAY)
9 BRN/WHT 419
10 DK GRN/WHT 428
11 TAN/BLK 422
12 RED/BLK 380
A/C REFRIGERANT PRESSURE SENSOR (IN HI PRESSURE LINE, ABOVE RIGHT WHEELHOUSE)
GRY
BLK
16 PNK 1439
INSTRUMENT CLUSTER SYSTEM
21 LT BLU 1876
22 DK BLU 496
DK BLU
LT BLU
RIGHT KNOCK SENSOR (RIGHT OF ENGINE BLOCK, BELOW EXHAUST MANIFOLD)
LEFT KNOCK SENSOR (LEFT OF ENGINE BLOCK, FORWARD OF STARTER)
28 YEL/BLK 1227
29 TAN 800
TAN
ELECTRONIC BRAKE CONTROL MODULE (LEFT SIDE OF ENGINE COMPARTMENT, PART OF BRAKE PRESSURE MODULATOR VALVE)
BLK/WHT
TAN
PPL
DATA LINK CONNECTOR (ATTACHED TO I/P CARRIER, RIGHT OF STEERING COLUMN)
G203 (BASE OF LEFT "A" PILLAR, BEHIND KICK PANEL)
POWERTRAIN CONTROL MODULE (ENGINE COMPARTMENT, FORWARD OF LEFT WHEELHOUSE, UNDER AIR CLEANER)
1 DK GRN/WHT
2 PPL
3 ORG/BLK
4 RED/BLK
5 PNK
6 DK BLU
7 RED
8 DK GRN/WHT
9 WHT
10 LT GRN
11 YEL/BLK
12 BRN
13 BLK/WHT
14 PNK
15 GRY
16 BLK
79360
PNK N SW A
DK BLU R SW B
RED P SW C
TRANS FLUID TEMP SENSOR
YEL/BLK L
PPL M
LT BLU/WHT D
FORCE MOTOR
RED/BLK C
HI LO
TCC ENABLE SOLENOID
TAN/BLK T
E
SHIFT SOLENOID A
LT GRN A
SHIFT SOLENOID B
YEL/BLK B
TCC CONTROL SOLENOID
BRN U
3-2 CTRL SOLENOID (PWM)
BRN S
ELECTRONIC CONTROLLED TRANSMISSION

Fig. 14: 5.7L (VIN P), Engine Performance Circuits (3 of 3)

EXTERIOR LIGHTS

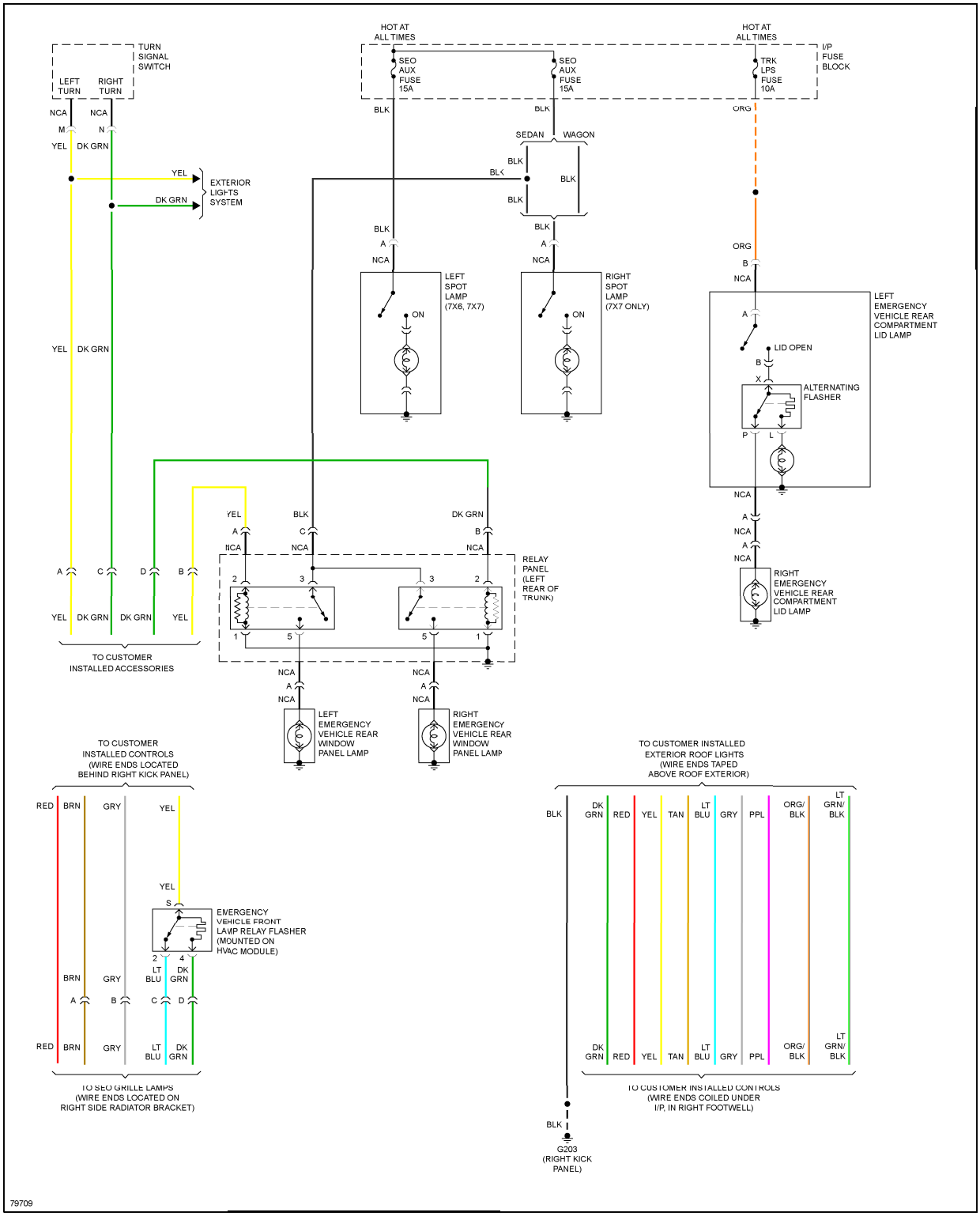
TURN SIGNAL SWITCH
LEFT TURN
RIGHT TURN
EXTERIOR LIGHTS SYSTEM
HOT AT ALL TIMES
SEO AUX FUSE 15A
TRK LPS FUSE 10A
I/P FUSE BLOCK
SEDAN
WAGON
LEFT SPOT LAMP (7X6, 7X7)
RIGHT SPOT LAMP (7X7 ONLY)
LEFT EMERGENCY VEHICLE REAR COMPARTMENT LID LAMP
LID OPEN
ALTERNATING FLASHER
RIGHT EMERGENCY VEHICLE REAR COMPARTMENT LID LAMP
RELAY PANEL (LEFT REAR OF TRUNK)
TO CUSTOMER INSTALLED ACCESSORIES
LEFT EMERGENCY VEHICLE REAR WINDOW PANEL LAMP
RIGHT EMERGENCY VEHICLE REAR WINDOW PANEL LAMP
TO CUSTOMER INSTALLED CONTROLS (WIRE ENDS LOCATED BEHIND RIGHT KICK PANEL)
EMERGENCY VEHICLE FRONT LAMP RELAY FLASHER (MOUNTED ON HVAC MODULE)
TO SEO GRILLE LAMPS (WIRE ENDS LOCATED ON RIGHT SIDE RADIATOR BRACKET)
TO CUSTOMER INSTALLED EXTERIOR ROOF LIGHTS (WIRE ENDS TAPED ABOVE ROOF EXTERIOR)
TO CUSTOMER INSTALLED CONTROLS (WIRE ENDS COILED UNDER I/P, IN RIGHT FOOTWELL)
G203 (RIGHT KICK PANEL)
79709

Fig. 15: Accessory Lamps Circuit

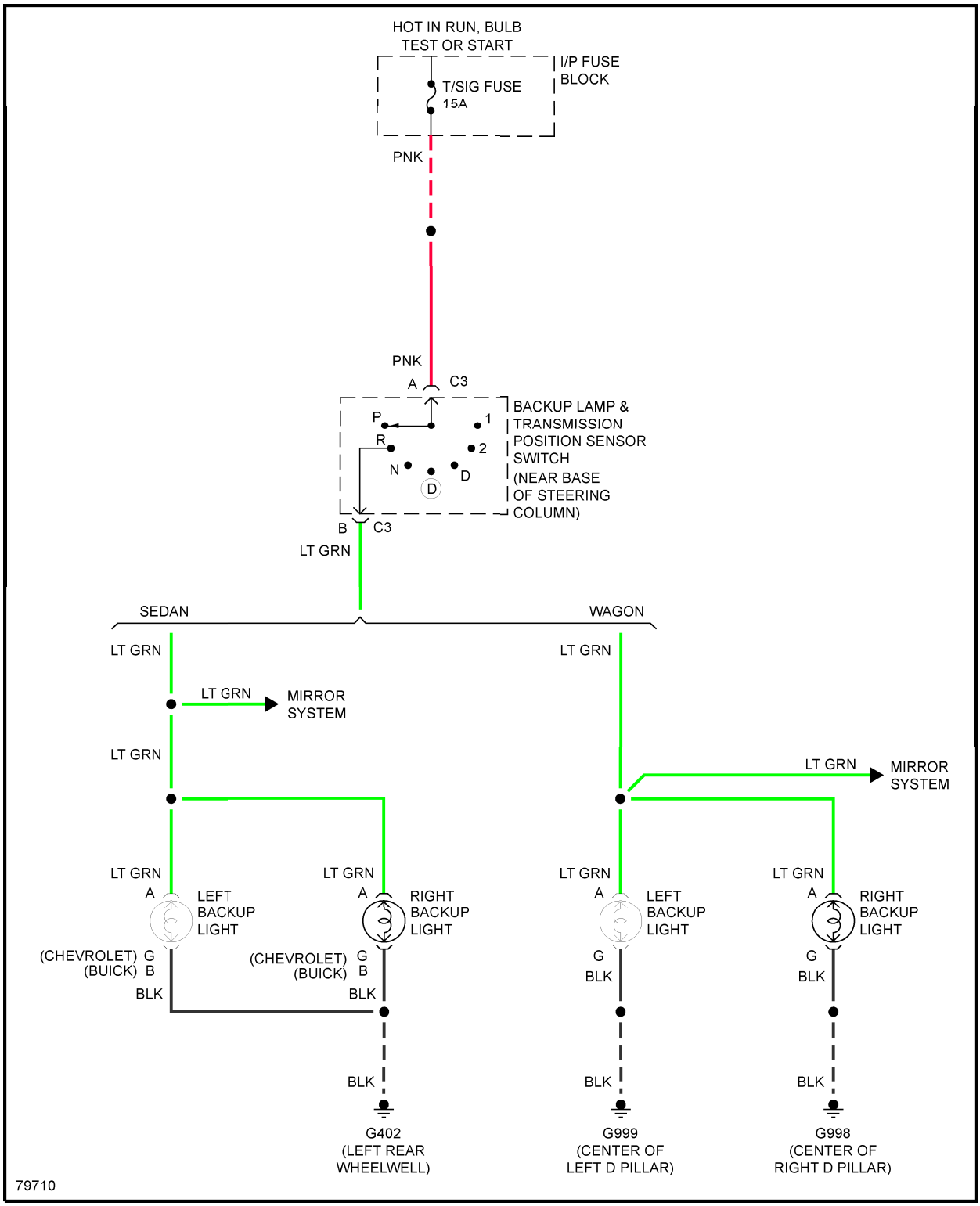
HOT IN RUN, BULB TEST OR START
I/P FUSE BLOCK
T/SIG FUSE 15A
PNK
PNK
A
C3
BACKUP LAMP & TRANSMISSION POSITION SENSOR SWITCH (NEAR BASE OF STEERING COLUMN)
P
R
N
D
1
2
B
C3
LT GRN
SEDAN
WAGON
LT GRN
LT GRN
MIRROR SYSTEM
LT GRN
LT GRN
MIRROR SYSTEM
LT GRN
A
LEFT BACKUP LIGHT
(CHEVROLET) G
(BUICK) B
BLK
LT GRN
A
RIGHT BACKUP LIGHT
(CHEVROLET) G
(BUICK) B
BLK
LT GRN
A
LEFT BACKUP LIGHT
G
BLK
LT GRN
A
RIGHT BACKUP LIGHT
G
BLK
BLK
BLK
BLK
G402 (LEFT REAR WHEELWELL)
G999 (CENTER OF LEFT D PILLAR)
G998 (CENTER OF RIGHT D PILLAR)
79710

Fig. 16: Backup Lamps Circuit

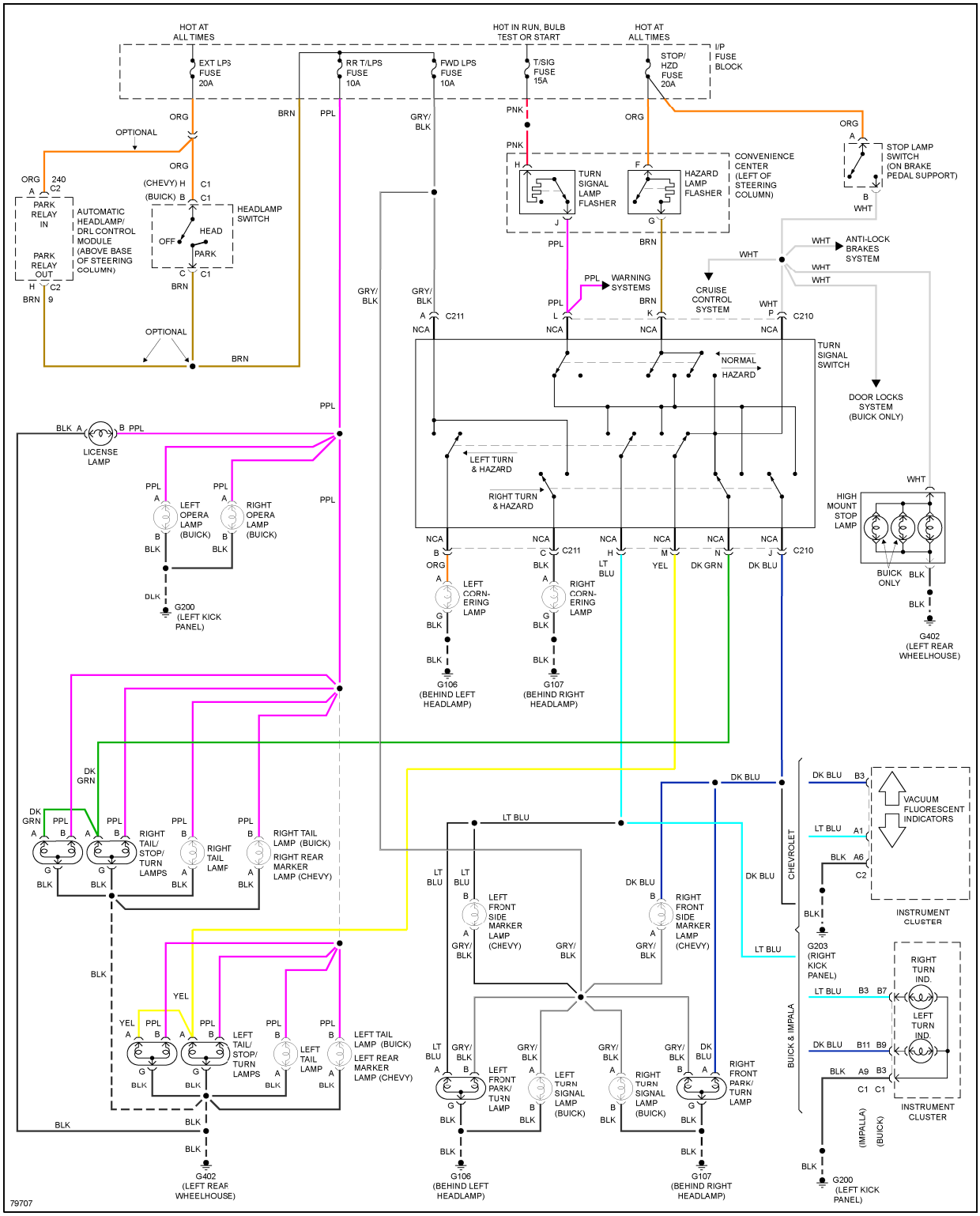
HOT AT ALL TIMES
HOT IN RUN, BULB TEST OR START
HOT AT ALL TIMES
I/P FUSE BLOCK
EXT LPS FUSE 20A
RR T/LPS FUSE 10A
FWD LPS FUSE 10A
T/SIG FUSE 15A
STOP/ HZD FUSE 20A
OPTIONAL
PARK RELAY IN
PARK RELAY OUT
AUTOMATIC HEADLAMP/ DRL CONTROL MODULE (ABOVE BASE OF STEERING COLUMN)
HEADLAMP SWITCH
HEAD
OFF
PARK
TURN SIGNAL LAMP FLASHER
HAZARD LAMP FLASHER
CONVENIENCE CENTER (LEFT OF STEERING COLUMN)
STOP LAMP SWITCH (ON BRAKE PEDAL SUPPORT)
ANTI-LOCK BRAKES SYSTEM
WARNING SYSTEMS
CRUISE CONTROL SYSTEM
TURN SIGNAL SWITCH
NORMAL
HAZARD
DOOR LOCKS SYSTEM (BUICK ONLY)
LICENSE LAMP
LEFT OPERA LAMP (BUICK)
RIGHT OPERA LAMP (BUICK)
G200 (LEFT KICK PANEL)
LEFT TURN & HAZARD
RIGHT TURN & HAZARD
HIGH MOUNT STOP LAMP
BUICK ONLY
G402 (LEFT REAR WHEELHOUSE)
LEFT CORN-ERING LAMP
RIGHT CORN-ERING LAMP
G106 (BEHIND LEFT HEADLAMP)
G107 (BEHIND RIGHT HEADLAMP)
RIGHT TAIL/ STOP/ TURN LAMPS
RIGHT TAIL LAMP
RIGHT TAIL LAMP (BUICK)
RIGHT REAR MARKER LAMP (CHEVY)
LEFT TAIL/ STOP/ TURN LAMPS
LEFT TAIL LAMP
LEFT TAIL LAMP (BUICK)
LEFT REAR MARKER LAMP (CHEVY)
LEFT FRONT SIDE MARKER LAMP (CHEVY)
RIGHT FRONT SIDE MARKER LAMP (CHEVY)
LEFT FRONT PARK/ TURN LAMP
LEFT TURN SIGNAL LAMP (BUICK)
RIGHT TURN SIGNAL LAMP (BUICK)
RIGHT FRONT PARK/ TURN LAMP
VACUUM FLUORESCENT INDICATORS
INSTRUMENT CLUSTER
G203 (RIGHT KICK PANEL)
RIGHT TURN IND.
LEFT TURN IND.
CHEVROLET
BUICK & IMPALA
(IMPALA)
(BUICK)
79707

Fig. 17: Exterior Lamps Circuit, Sedan

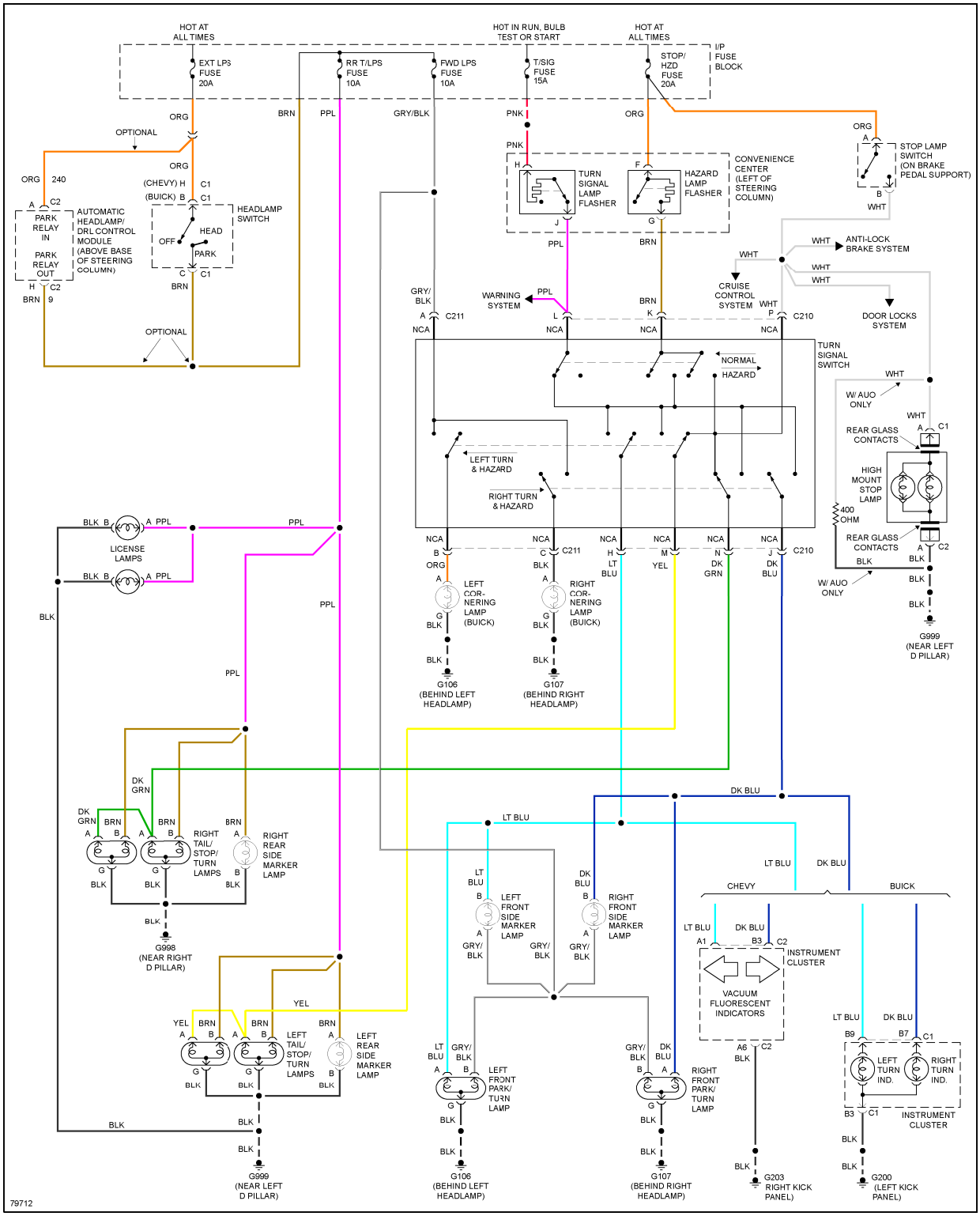
HOT AT ALL TIMES
HOT IN RUN, BULB TEST OR START
HOT AT ALL TIMES
I/P FUSE BLOCK
EXT LPS FUSE 20A
RR T/LPS FUSE 10A
FWD LPS FUSE 10A
T/SIG FUSE 15A
STOP/ HZD FUSE 20A
OPTIONAL
AUTOMATIC HEADLAMP/ DRL CONTROL MODULE (ABOVE BASE OF STEERING COLUMN)
PARK RELAY IN
PARK RELAY OUT
HEADLAMP SWITCH
HEAD
OFF
PARK
(CHEVY) H
(BUICK) B
TURN SIGNAL LAMP FLASHER
HAZARD LAMP FLASHER
CONVENIENCE CENTER (LEFT OF STEERING COLUMN)
STOP LAMP SWITCH (ON BRAKE PEDAL SUPPORT)
ANTI-LOCK BRAKE SYSTEM
CRUISE CONTROL SYSTEM
WARNING SYSTEM
DOOR LOCKS SYSTEM
TURN SIGNAL SWITCH
NORMAL
HAZARD
LEFT TURN & HAZARD
RIGHT TURN & HAZARD
W/ AUO ONLY
REAR GLASS CONTACTS
HIGH MOUNT STOP LAMP
400 OHM
LICENSE LAMPS
LEFT CORNERING LAMP (BUICK)
RIGHT CORNERING LAMP (BUICK)
G106 (BEHIND LEFT HEADLAMP)
G107 (BEHIND RIGHT HEADLAMP)
G999 (NEAR LEFT D PILLAR)
RIGHT TAIL/ STOP/ TURN LAMPS
RIGHT REAR SIDE MARKER LAMP
G998 (NEAR RIGHT D PILLAR)
LEFT FRONT SIDE MARKER LAMP
RIGHT FRONT SIDE MARKER LAMP
CHEVY
BUICK
INSTRUMENT CLUSTER
VACUUM FLUORESCENT INDICATORS
LEFT TAIL/ STOP/ TURN LAMPS
LEFT REAR SIDE MARKER LAMP
LEFT FRONT PARK/ TURN LAMP
RIGHT FRONT PARK/ TURN LAMP
LEFT TURN IND.
RIGHT TURN IND.
G203 RIGHT KICK PANEL)
G200 (LEFT KICK PANEL)
79712

Fig. 18: Exterior Lamps Circuit, Wagon

GROUND DISTRIBUTION

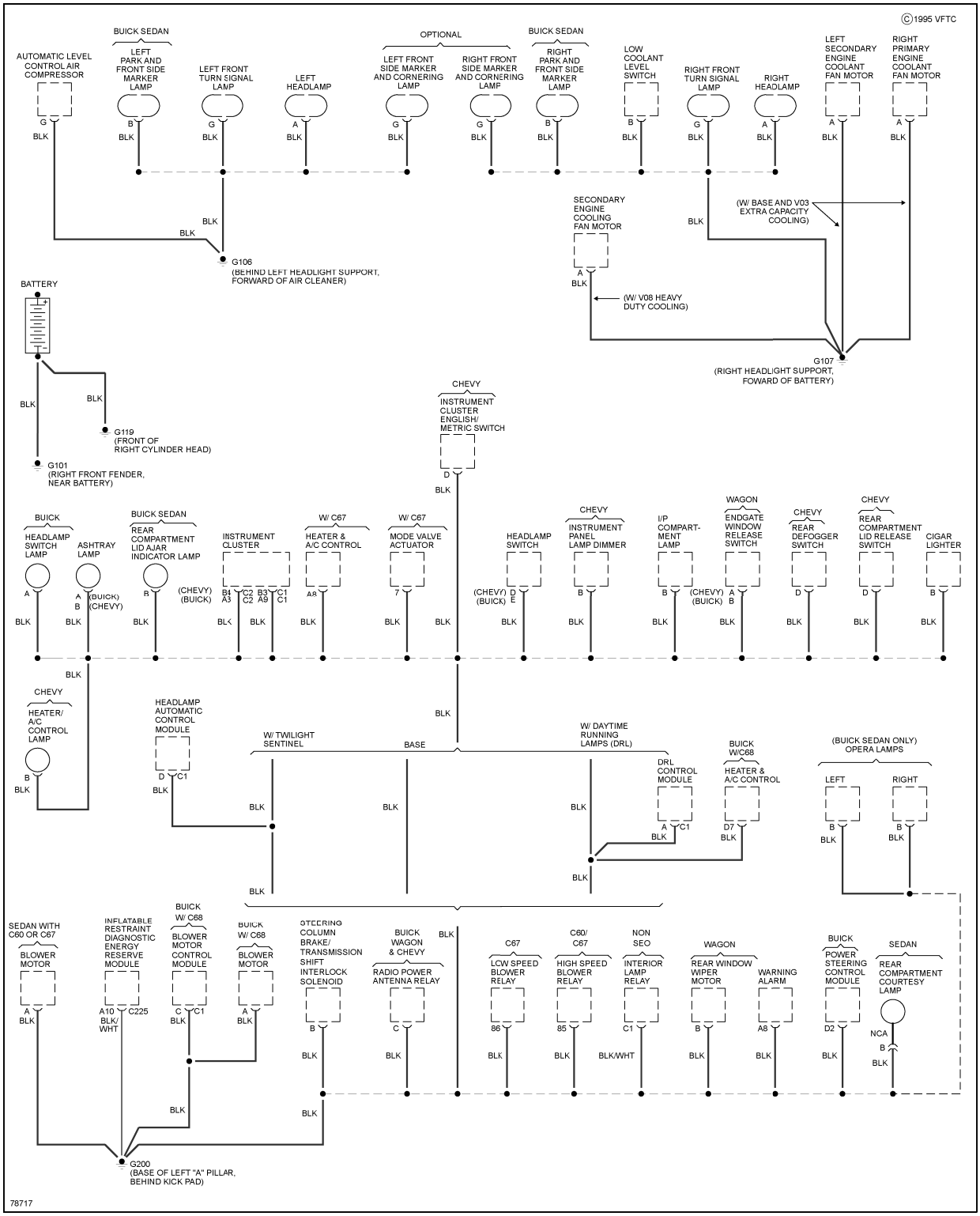
©1995 VFTC
AUTOMATIC LEVEL CONTROL AIR COMPRESSOR
BUICK SEDAN
LEFT PARK AND FRONT SIDE MARKER LAMP
LEFT FRONT TURN SIGNAL LAMP
LEFT HEADLAMP
OPTIONAL
LEFT FRONT SIDE MARKER AND CORNERING LAMP
RIGHT FRONT SIDE MARKER AND CORNERING LAMP
BUICK SEDAN
RIGHT PARK AND FRONT SIDE MARKER LAMP
LOW COOLANT LEVEL SWITCH
RIGHT FRONT TURN SIGNAL LAMP
RIGHT HEADLAMP
LEFT SECONDARY ENGINE COOLANT FAN MOTOR
RIGHT PRIMARY ENGINE COOLANT FAN MOTOR
SECONDARY ENGINE COOLING FAN MOTOR
(W/ BASE AND V03 EXTRA CAPACITY COOLING)
(W/ V08 HEAVY DUTY COOLING)
G106 (BEHIND LEFT HEADLIGHT SUPPORT, FORWARD OF AIR CLEANER)
G107 (RIGHT HEADLIGHT SUPPORT, FOWARD OF BATTERY)
BATTERY
G119 (FRONT OF RIGHT CYLINDER HEAD)
G101 (RIGHT FRONT FENDER, NEAR BATTERY)
CHEVY
INSTRUMENT CLUSTER ENGLISH/ METRIC SWITCH
BUICK
HEADLAMP SWITCH LAMP
ASHTRAY LAMP
BUICK SEDAN
REAR COMPARTMENT LID AJAR INDICATOR LAMP
INSTRUMENT CLUSTER
W/ C67
HEATER & A/C CONTROL
W/ C67
MODE VALVE ACTUATOR
HEADLAMP SWITCH
CHEVY
INSTRUMENT PANEL LAMP DIMMER
I/P COMPART-MENT LAMP
WAGON
ENDGATE WINDOW RELEASE SWITCH
CHEVY
REAR DEFOGGER SWITCH
CHEVY
REAR COMPARTMENT LID RELEASE SWITCH
CIGAR LIGHTER
CHEVY
HEATER/ A/C CONTROL LAMP
HEADLAMP AUTOMATIC CONTROL MODULE
W/ TWILIGHT SENTINEL
BASE
W/ DAYTIME RUNNING LAMPS (DRL)
DRL CONTROL MODULE
BUICK W/C68
HEATER & A/C CONTROL
(BUICK SEDAN ONLY) OPERA LAMPS
LEFT
RIGHT
SEDAN WITH C60 OR C67
BLOWER MOTOR
INFLATABLE RESTRAINT DIAGNOSTIC ENERGY RESERVE MODULE
BUICK W/ C68
BLOWER MOTOR CONTROL MODULE
BUICK W/ C68
BLOWER MOTOR
STEERING COLUMN BRAKE/ TRANSMISSION SHIFT INTERLOCK SOLENOID
BUICK WAGON & CHEVY
RADIO POWER ANTENNA RELAY
C67
LOW SPEED BLOWER RELAY
C60/ C67
HIGH SPEED BLOWER RELAY
NON SEO
INTERIOR LAMP RELAY
WAGON
REAR WINDOW WIPER MOTOR
WARNING ALARM
BUICK
POWER STEERING CONTROL MODULE
SEDAN
REAR COMPARTMENT COURTESY LAMP
G200 (BASE OF LEFT "A" PILLAR, BEHIND KICK PAD)
78717

Fig. 19: Ground Distribution Circuit (1 of 3)

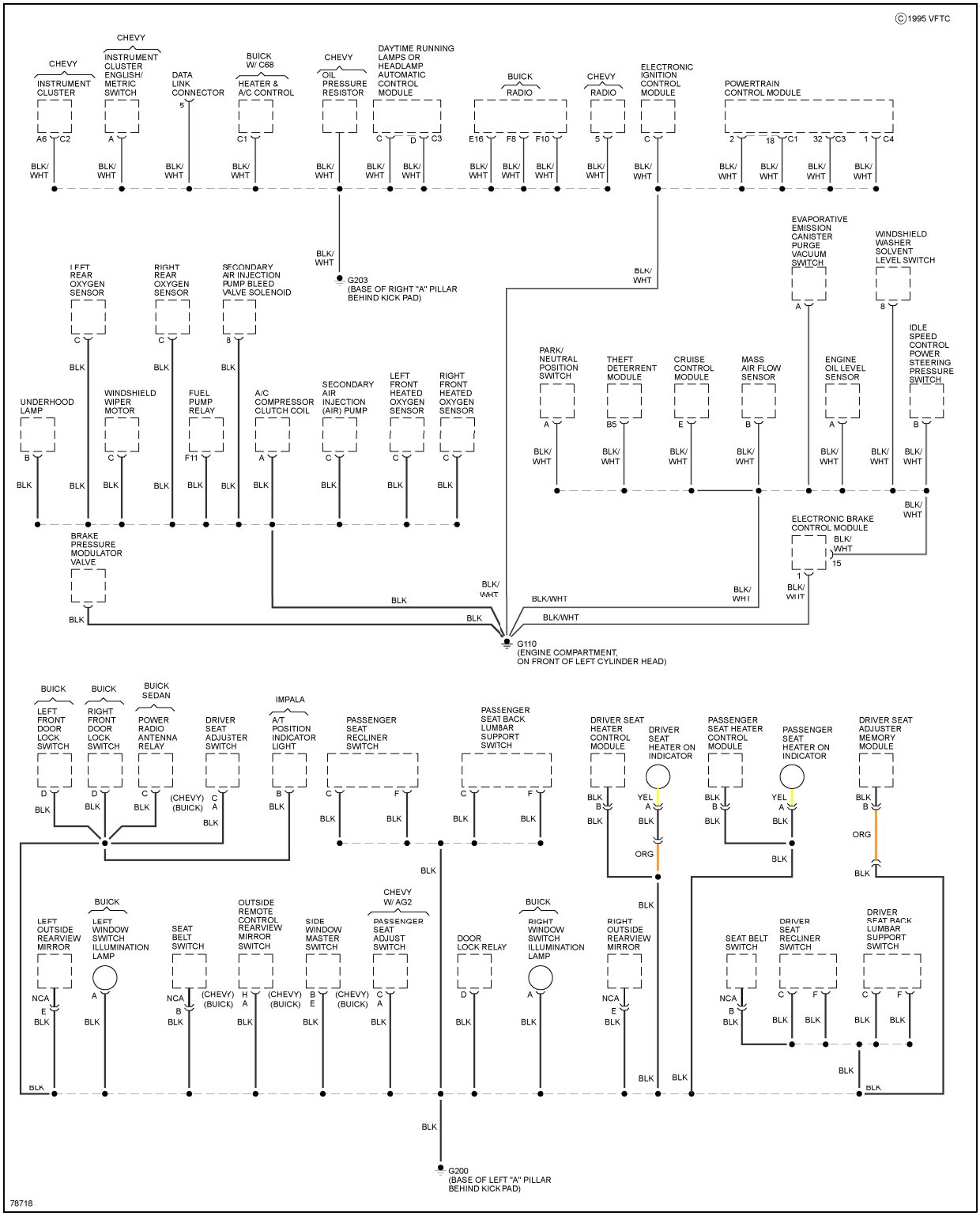
©1995 VFTC
CHEVY INSTRUMENT CLUSTER
CHEVY INSTRUMENT CLUSTER ENGLISH/ METRIC SWITCH
DATA LINK CONNECTOR
BUICK W/ C68 HEATER & A/C CONTROL
CHEVY OIL PRESSURE RESISTOR
DAYTIME RUNNING LAMPS OR HEADLAMP AUTOMATIC CONTROL MODULE
BUICK RADIO
CHEVY RADIO
ELECTRONIC IGNITION CONTROL MODULE
POWERTRAIN CONTROL MODULE
G203 (BASE OF RIGHT "A" PILLAR BEHIND KICK PAD)
EVAPORATIVE EMISSION CANISTER PURGE VACUUM SWITCH
WINDSHIELD WASHER SOLVENT LEVEL SWITCH
LEFT REAR OXYGEN SENSOR
RIGHT REAR OXYGEN SENSOR
SECONDARY AIR INJECTION PUMP BLEED VALVE SOLENOID
PARK/ NEUTRAL POSITION SWITCH
THEFT DETERRENT MODULE
CRUISE CONTROL MODULE
MASS AIR FLOW SENSOR
ENGINE OIL LEVEL SENSOR
IDLE SPEED CONTROL POWER STEERING PRESSURE SWITCH
UNDERHOOD LAMP
WINDSHIELD WIPER MOTOR
FUEL PUMP RELAY
A/C COMPRESSOR CLUTCH COIL
SECONDARY AIR INJECTION (AIR) PUMP
LEFT FRONT HEATED OXYGEN SENSOR
RIGHT FRONT HEATED OXYGEN SENSOR
ELECTRONIC BRAKE CONTROL MODULE
BRAKE PRESSURE MODULATOR VALVE
G110 (ENGINE COMPARTMENT, ON FRONT OF LEFT CYLINDER HEAD)
BUICK LEFT FRONT DOOR LOCK SWITCH
BUICK RIGHT FRONT DOOR LOCK SWITCH
BUICK SEDAN POWER RADIO ANTENNA RELAY
DRIVER SEAT ADJUSTER SWITCH
IMPALA A/T POSITION INDICATOR LIGHT
PASSENGER SEAT RECLINER SWITCH
PASSENGER SEAT BACK LUMBAR SUPPORT SWITCH
DRIVER SEAT HEATER CONTROL MODULE
DRIVER SEAT HEATER ON INDICATOR
PASSENGER SEAT HEATER CONTROL MODULE
PASSENGER SEAT HEATER ON INDICATOR
DRIVER SEAT ADJUSTER MEMORY MODULE
LEFT OUTSIDE REARVIEW MIRROR
BUICK LEFT WINDOW SWITCH ILLUMINATION LAMP
SEAT BELT SWITCH
OUTSIDE REMOTE CONTROL REARVIEW MIRROR SWITCH
SIDE WINDOW MASTER SWITCH
CHEVY W/ AG2 PASSENGER SEAT ADJUST SWITCH
DOOR LOCK RELAY
BUICK RIGHT WINDOW SWITCH ILLUMINATION LAMP
RIGHT OUTSIDE REARVIEW MIRROR
SEAT BELT SWITCH
DRIVER SEAT RECLINER SWITCH
DRIVER SEAT BACK LUMBAR SUPPORT SWITCH
G200 (BASE OF LEFT "A" PILLAR BEHIND KICK PAD)
78718

Fig. 20: Ground Distribution Circuit (2 of 3)

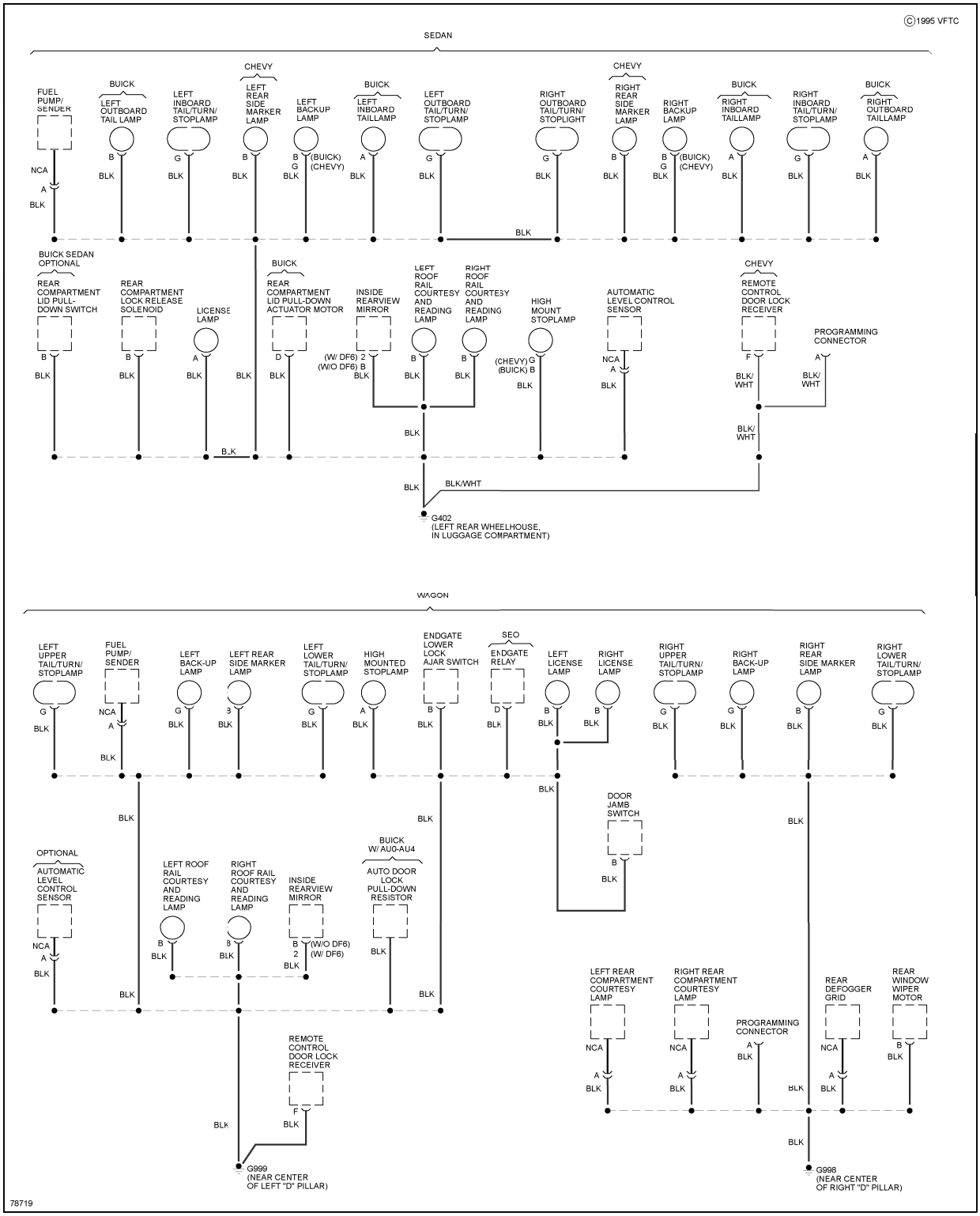
©1995 VFTC
SEDAN
FUEL PUMP/ SENDER
BUICK
LEFT OUTBOARD TAIL LAMP
LEFT INBOARD TAIL/TURN/ STOPLAMP
CHEVY
LEFT REAR SIDE MARKER LAMP
LEFT BACKUP LAMP
BUICK
LEFT INBOARD TAILLAMP
LEFT OUTBOARD TAIL/TURN/ STOPLAMP
RIGHT OUTBOARD TAIL/TURN/ STOPLIGHT
CHEVY
RIGHT REAR SIDE MARKER LAMP
RIGHT BACKUP LAMP
BUICK
RIGHT INBOARD TAILLAMP
RIGHT INBOARD TAIL/TURN/ STOPLAMP
BUICK
RIGHT OUTBOARD TAILLAMP
(BUICK) (CHEVY)
BUICK SEDAN OPTIONAL
REAR COMPARTMENT LID PULL-DOWN SWITCH
REAR COMPARTMENT LOCK RELEASE SOLENOID
LICENSE LAMP
BUICK
REAR COMPARTMENT LID PULL-DOWN ACTUATOR MOTOR
INSIDE REARVIEW MIRROR
LEFT ROOF RAIL COURTESY AND READING LAMP
RIGHT ROOF RAIL COURTESY AND READING LAMP
HIGH MOUNT STOPLAMP
AUTOMATIC LEVEL CONTROL SENSOR
CHEVY
REMOTE CONTROL DOOR LOCK RECEIVER
PROGRAMMING CONNECTOR
(W/ DF6) (W/O DF6)
(CHEVY) (BUICK)
BLK/ WHT
BLK/WHT
G402
(LEFT REAR WHEELHOUSE, IN LUGGAGE COMPARTMENT)
WAGON
LEFT UPPER TAIL/TURN/ STOPLAMP
FUEL PUMP/ SENDER
LEFT BACK-UP LAMP
LEFT REAR SIDE MARKER LAMP
LEFT LOWER TAIL/TURN/ STOPLAMP
HIGH MOUNTED STOPLAMP
ENDGATE LOWER LOCK AJAR SWITCH
SEO
ENDGATE RELAY
LEFT LICENSE LAMP
RIGHT LICENSE LAMP
RIGHT UPPER TAIL/TURN/ STOPLAMP
RIGHT BACK-UP LAMP
RIGHT REAR SIDE MARKER LAMP
RIGHT LOWER TAIL/TURN/ STOPLAMP
DOOR JAMB SWITCH
OPTIONAL
AUTOMATIC LEVEL CONTROL SENSOR
LEFT ROOF RAIL COURTESY AND READING LAMP
RIGHT ROOF RAIL COURTESY AND READING LAMP
INSIDE REARVIEW MIRROR
BUICK W/ AU0-AU4
AUTO DOOR LOCK PULL-DOWN RESISTOR
(W/O DF6) (W/ DF6)
LEFT REAR COMPARTMENT COURTESY LAMP
RIGHT REAR COMPARTMENT COURTESY LAMP
PROGRAMMING CONNECTOR
REAR DEFOGGER GRID
REAR WINDOW WIPER MOTOR
REMOTE CONTROL DOOR LOCK RECEIVER
G999
(NEAR CENTER OF LEFT "D" PILLAR)
G998
(NEAR CENTER OF RIGHT "D" PILLAR)
78719

Fig. 21: Ground Distribution Circuit (3 of 3)

HEADLIGHTS

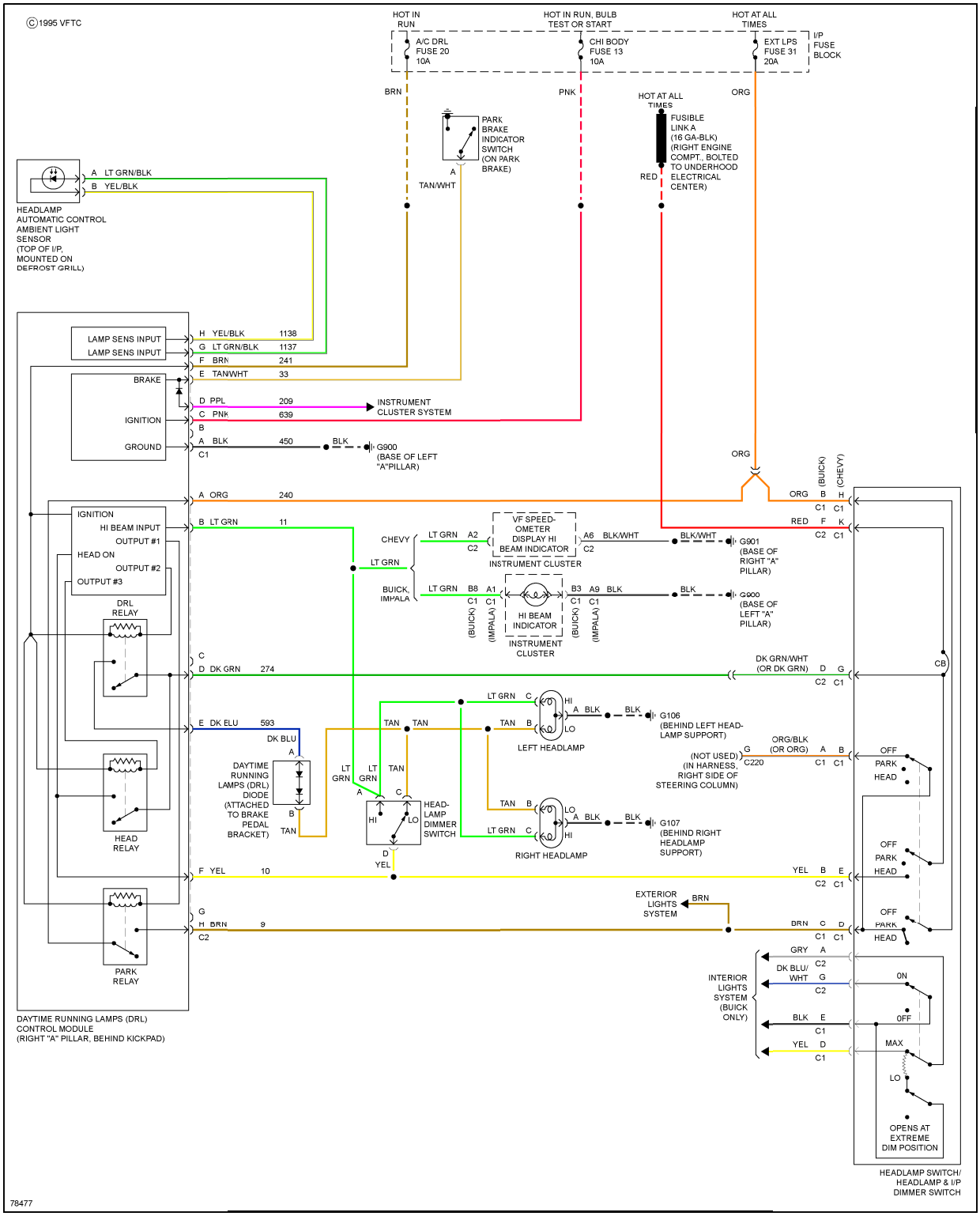
©1995 VFTC
HOT IN RUN
HOT IN RUN, BULB TEST OR START
HOT AT ALL TIMES
A/C DRL FUSE 20 10A
CHI BODY FUSE 13 10A
EXT LPS FUSE 31 20A
I/P FUSE BLOCK
BRN
PNK
ORG
PARK BRAKE INDICATOR SWITCH (ON PARK BRAKE)
TAN/WHT
FUSIBLE LINK A (16 GA-BLK) (RIGHT ENGINE COMPT., BOLTED TO UNDERHOOD ELECTRICAL CENTER)
RED
A LT GRN/BLK
B YEL/BLK
HEADLAMP AUTOMATIC CONTROL AMBIENT LIGHT SENSOR (TOP OF I/P, MOUNTED ON DEFROST GRILL)
LAMP SENS INPUT
LAMP SENS INPUT
BRAKE
IGNITION
GROUND
H YEL/BLK 1138
G LT GRN/BLK 1137
F BRN 241
E TAN/WHT 33
D PPL 209
C PNK 639
INSTRUMENT CLUSTER SYSTEM
A BLK 450
BLK
G900 (BASE OF LEFT "A"PILLAR)
A ORG 240
B LT GRN 11
IGNITION
HI BEAM INPUT
OUTPUT #1
HEAD ON
OUTPUT #2
OUTPUT #3
DRL RELAY
HEAD RELAY
PARK RELAY
D DK GRN 274
E DK ELU 593
DK BLU
F YEL 10
H BRN 9
DAYTIME RUNNING LAMPS (DRL) CONTROL MODULE (RIGHT "A" PILLAR, BEHIND KICKPAD)
CHEVY
LT GRN A2 C2
VF SPEED-OMETER DISPLAY HI BEAM INDICATOR
INSTRUMENT CLUSTER
A6 BLK/WHT C2
BLK/WHT
G901 (BASE OF RIGHT "A" PILLAR)
BUICK, IMPALA
LT GRN B8 A1 C1 C1
HI BEAM INDICATOR
B3 A9 BLK C1 C1
G900 (BASE OF LEFT "A" PILLAR)
(BUICK) (IMPALA)
DK GRN/WHT (OR DK GRN)
CB
DAYTIME RUNNING LAMPS (DRL) DIODE (ATTACHED TO BRAKE PEDAL BRACKET)
TAN
LT GRN
HEAD-LAMP DIMMER SWITCH
HI
LO
YEL
LEFT HEADLAMP
RIGHT HEADLAMP
G106 (BEHIND LEFT HEAD-LAMP SUPPORT)
G107 (BEHIND RIGHT HEADLAMP SUPPORT)
ORG/BLK (OR ORG)
(NOT USED) (IN HARNESS, RIGHT SIDE OF STEERING COLUMN)
C220
OFF
PARK
HEAD
EXTERIOR LIGHTS SYSTEM
INTERIOR LIGHTS SYSTEM (BUICK ONLY)
GRY A C2
DK BLU/WHT G C2
BLK E C1
YEL D C1
ON
OFF
MAX
LO
OPENS AT EXTREME DIM POSITION
HEADLAMP SWITCH/ HEADLAMP & I/P DIMMER SWITCH
78477

Fig. 22: Headlight Circuit, W/ DRL

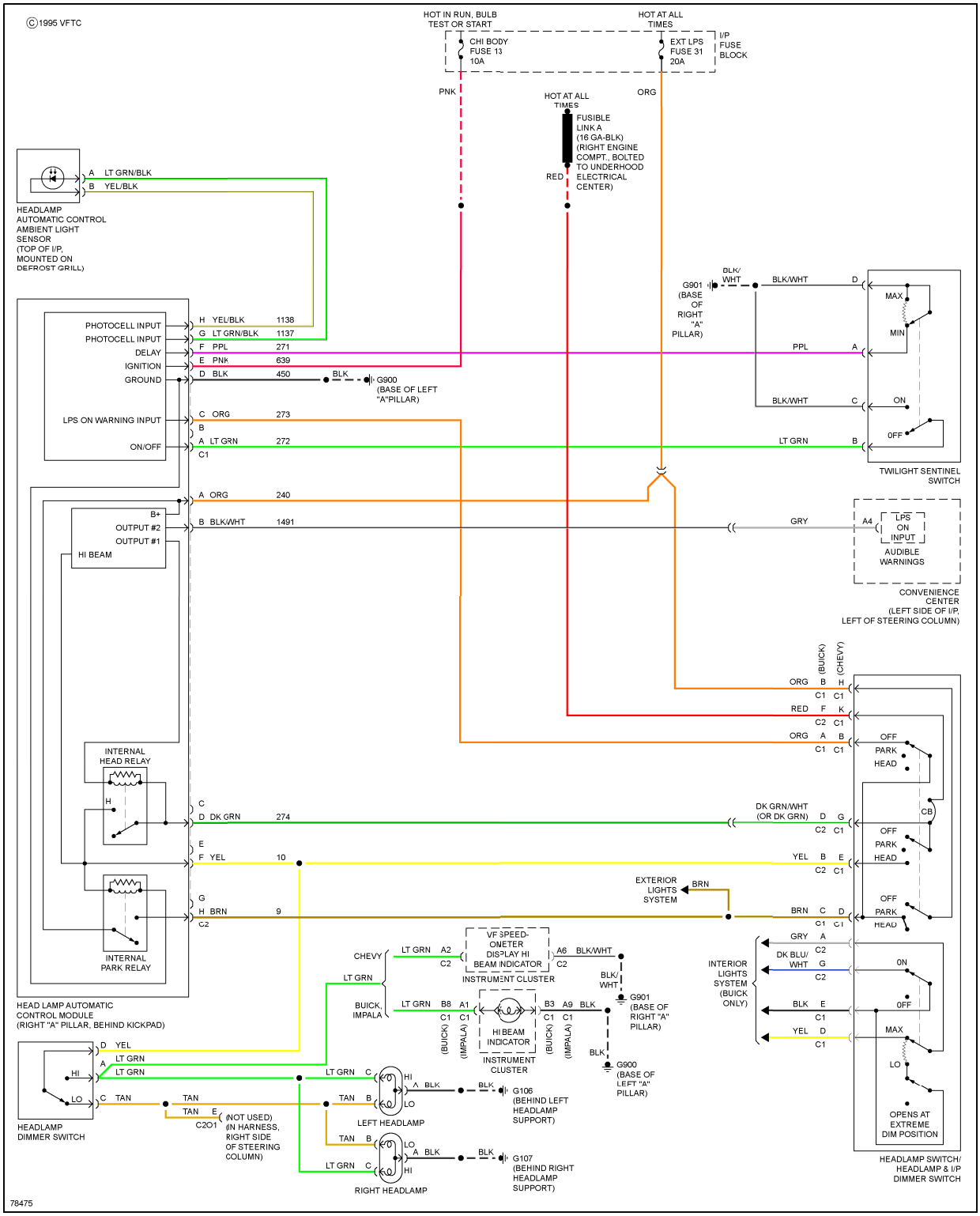
©1995 VFTC
HOT IN RUN, BULB TEST OR START
HOT AT ALL TIMES
CHI BODY FUSE 13 10A
EXT LPS FUSE 31 20A
I/P FUSE BLOCK
PNK
ORG
HOT AT ALL TIMES
FUSIBLE LINK A (16 GA-BLK) (RIGHT ENGINE COMPT., BOLTED TO UNDERHOOD ELECTRICAL CENTER)
RED
HEADLAMP AUTOMATIC CONTROL AMBIENT LIGHT SENSOR (TOP OF I/P, MOUNTED ON DEFROST GRILL)
A LT GRN/BLK
B YEL/BLK
PHOTOCELL INPUT
PHOTOCELL INPUT
DELAY
IGNITION
GROUND
LPS ON WARNING INPUT
ON/OFF
H YEL/BLK 1138
G LT GRN/BLK 1137
F PPL 271
E PNK 639
D BLK 450
BLK
G900 (BASE OF LEFT "A"PILLAR)
C ORG 273
A LT GRN 272
C1
A ORG 240
B+
OUTPUT #2
OUTPUT #1
HI BEAM
B BLK/WHT 1491
INTERNAL HEAD RELAY
H
C
D DK GRN 274
E
F YEL 10
G
H BRN 9
C2
INTERNAL PARK RELAY
HEAD LAMP AUTOMATIC CONTROL MODULE (RIGHT "A" PILLAR, BEHIND KICKPAD)
D YEL
A LT GRN
HI
LT GRN
LO
C TAN
TAN
TAN E
C2O1
(NOT USED) (IN HARNESS, RIGHT SIDE OF STEERING COLUMN)
HEADLAMP DIMMER SWITCH
G901 (BASE OF RIGHT "A" PILLAR)
BLK/WHT
BLK/WHT D
PPL A
BLK/WHT C
LT GRN B
MAX
MIN
ON
OFF
TWILIGHT SENTINEL SWITCH
GRY
A4
LPS ON INPUT
AUDIBLE WARNINGS
CONVENIENCE CENTER (LEFT SIDE OF I/P, LEFT OF STEERING COLUMN)
(BUICK)
(CHEVY)
ORG B H
C1 C1
RED F K
C2 C1
ORG A B
C1 C1
OFF
PARK
HEAD
CB
DK GRN/WHT (OR DK GRN) D G
C2 C1
YEL B E
C2 C1
EXTERIOR LIGHTS SYSTEM
BRN
BRN C D
C1 C1
CHEVY
LT GRN A2
C2
VF SPEED-ONETER DISPLAY HI BEAM INDICATOR
INSTRUMENT CLUSTER
A6 BLK/WHT
C2
BLK/WHT
LT GRN
BUICK, IMPALA
LT GRN B8 A1
C1 C1
(BUICK)
(IMPALA)
HI BEAM INDICATOR
INSTRUMENT CLUSTER
B3 A9 BLK
C1 C1
(BUICK)
(IMPALA)
G901 (BASE OF RIGHT "A" PILLAR)
BLK
G900 (BASE OF LEFT "A" PILLAR)
INTERIOR LIGHTS SYSTEM (BUICK ONLY)
GRY A
C2
DK BLU/WHT G
C2
BLK E
C1
YEL D
C1
ON
OFF
MAX
LO
OPENS AT EXTREME DIM POSITION
HEADLAMP SWITCH/ HEADLAMP & I/P DIMMER SWITCH
LT GRN C
HI
BLK
BLK
G106 (BEHIND LEFT HEADLAMP SUPPORT)
TAN B
LO
LEFT HEADLAMP
TAN B
LO
BLK
BLK
G107 (BEHIND RIGHT HEADLAMP SUPPORT)
LT GRN C
HI
RIGHT HEADLAMP
78475

Fig. 23: Headlight Circuit, W/O DRL, W/ Twilight Sentinel

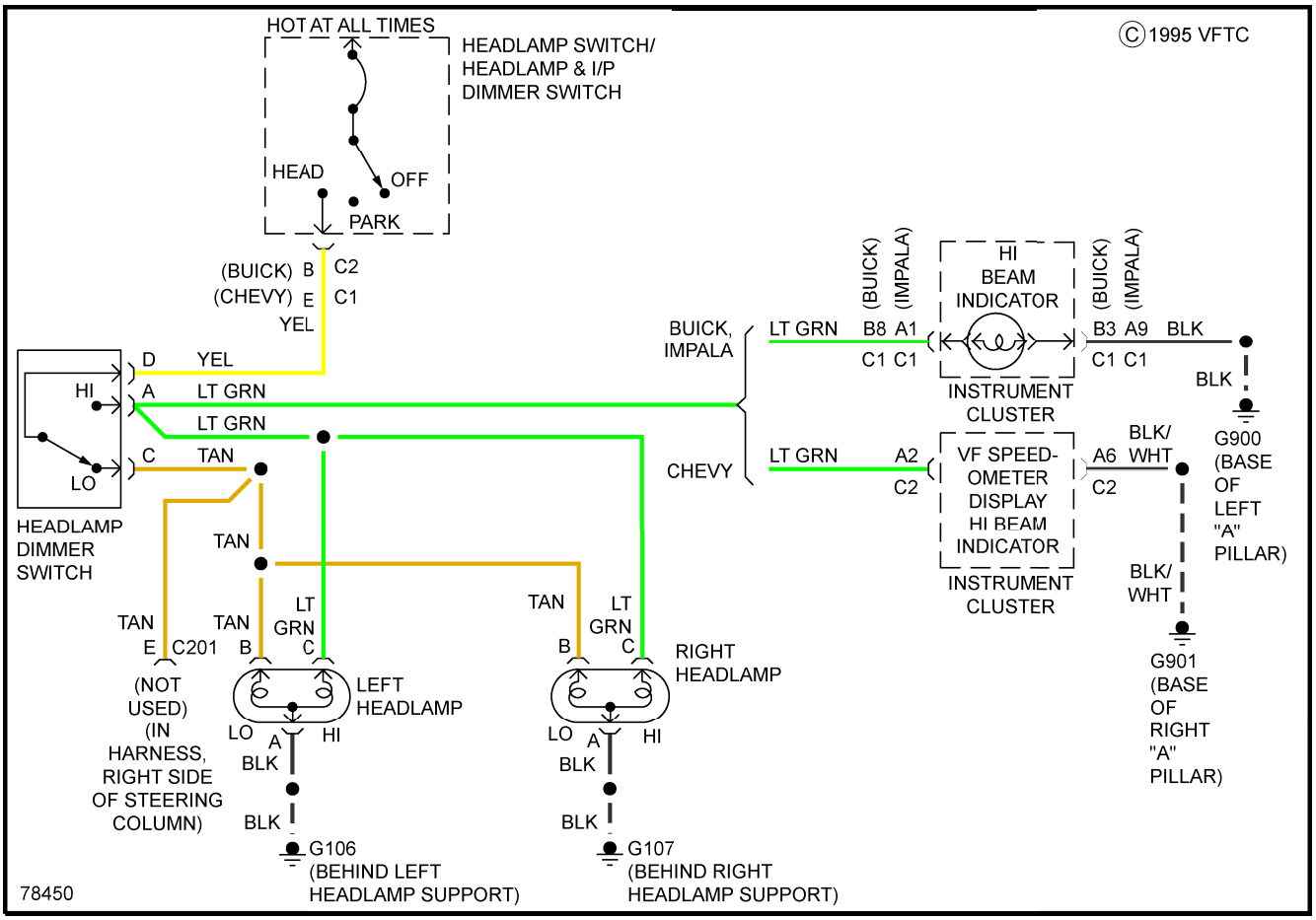
HOT AT ALL TIMES
HEADLAMP SWITCH/
HEADLAMP & I/P
DIMMER SWITCH
HEAD
OFF
PARK
(BUICK) B C2
(CHEVY) E C1
YEL
HI
LO
D YEL
A LT GRN
LT GRN
C TAN
HEADLAMP
DIMMER
SWITCH
TAN
TAN
E C201
(NOT
USED)
(IN
HARNESS,
RIGHT SIDE
OF STEERING
COLUMN)
TAN
B
LT
GRN
C
LEFT
HEADLAMP
LO
A
HI
BLK
BLK
G106
(BEHIND LEFT
HEADLAMP SUPPORT)
TAN
B
LT
GRN
C
RIGHT
HEADLAMP
LO
A
HI
BLK
BLK
G107
(BEHIND RIGHT
HEADLAMP SUPPORT)
78450
BUICK,
IMPALA
LT GRN
(BUICK)
(IMPALA)
B8 A1
C1 C1
HI
BEAM
INDICATOR
INSTRUMENT
CLUSTER
(BUICK)
(IMPALA)
B3 A9
C1 C1
BLK
BLK
G900
(BASE
OF
LEFT
"A"
PILLAR)
CHEVY
LT GRN
A2
C2
VF SPEED-
OMETER
DISPLAY
HI BEAM
INDICATOR
INSTRUMENT
CLUSTER
A6
C2
BLK/
WHT
BLK/
WHT
G901
(BASE
OF
RIGHT
"A"
PILLAR)
©1995 VFTC

Fig. 24: Headlight Circuit, W/O DRL, W/O Twilight Sentinel

HORN

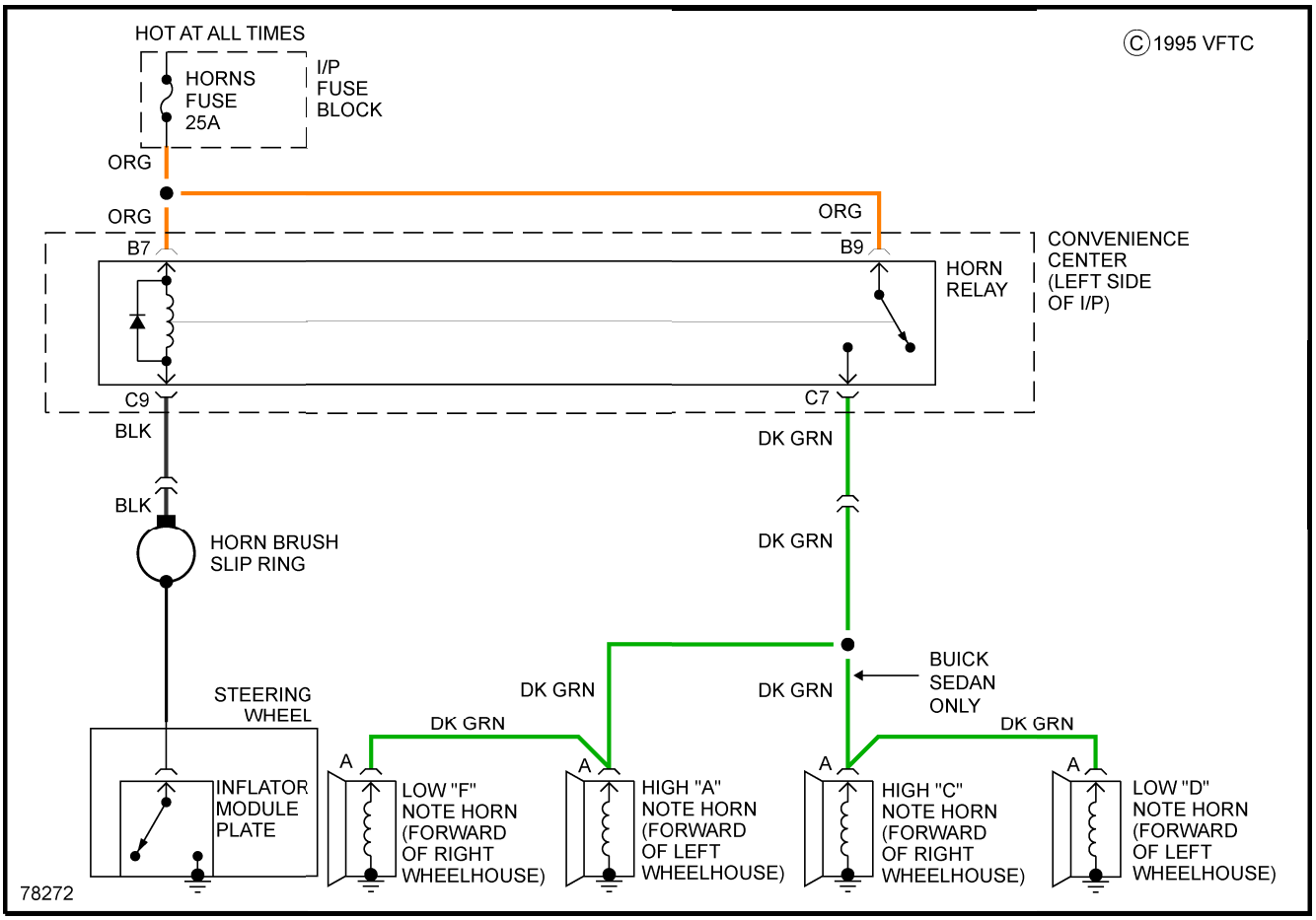
HOT AT ALL TIMES
HORNS FUSE 25A
I/P FUSE BLOCK
© 1995 VFTC
ORG
ORG
ORG
B7
B9
HORN RELAY
CONVENIENCE CENTER (LEFT SIDE OF I/P)
C9
C7
BLK
DK GRN
BLK
DK GRN
HORN BRUSH SLIP RING
BUICK SEDAN ONLY
DK GRN
DK GRN
STEERING WHEEL
DK GRN
DK GRN
INFLATOR MODULE PLATE
A
LOW "F" NOTE HORN (FORWARD OF RIGHT WHEELHOUSE)
HIGH "A" NOTE HORN (FORWARD OF LEFT WHEELHOUSE)
HIGH "C" NOTE HORN (FORWARD OF RIGHT WHEELHOUSE)
LOW "D" NOTE HORN (FORWARD OF LEFT WHEELHOUSE)
78272

Fig. 25: Horn Circuit

INSTRUMENT CLUSTER

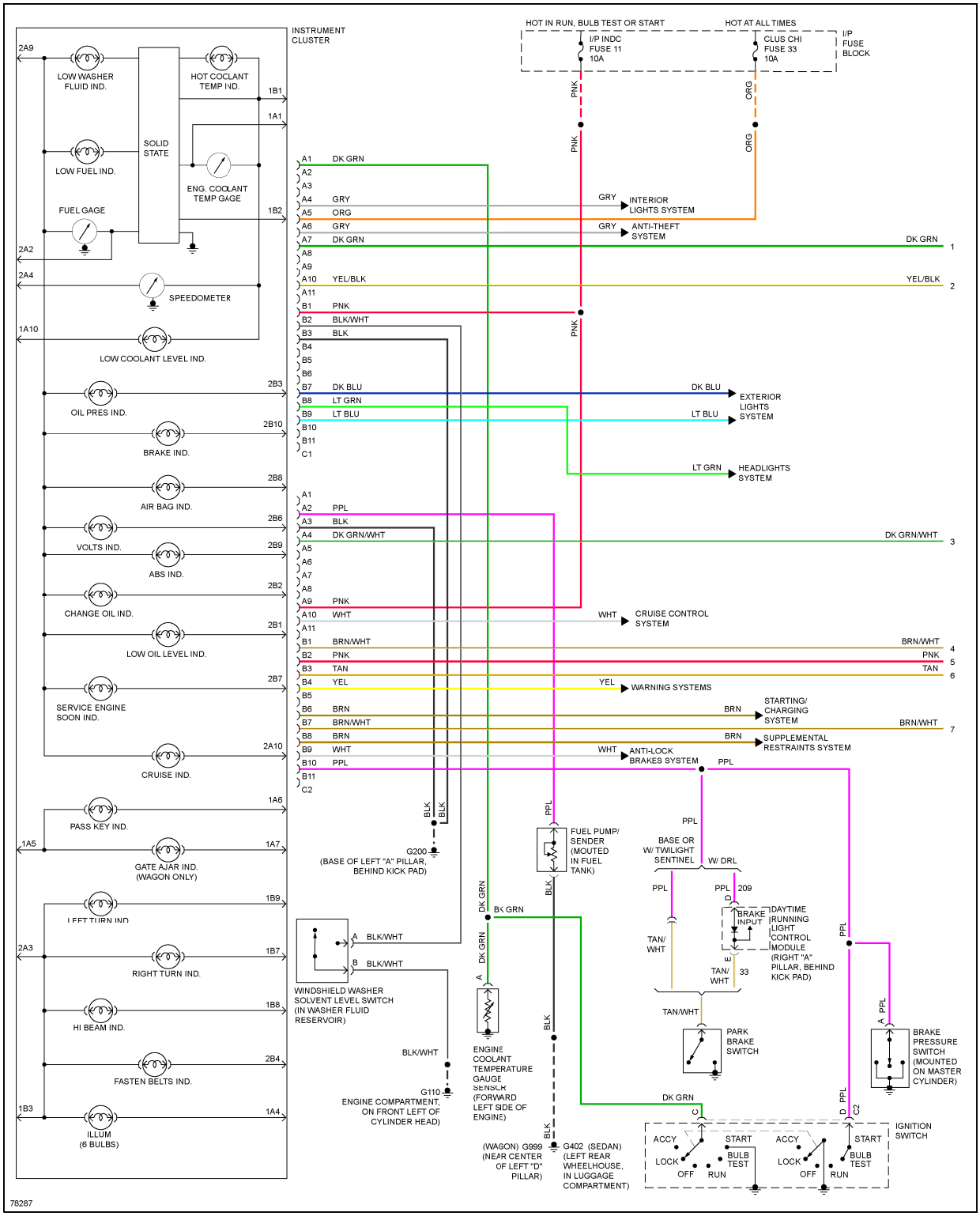
INSTRUMENT CLUSTER
LOW WASHER FLUID IND.
HOT COOLANT TEMP IND.
SOLID STATE
LOW FUEL IND.
ENG. COOLANT TEMP GAGE
FUEL GAGE
SPEEDOMETER
LOW COOLANT LEVEL IND.
OIL PRES IND.
BRAKE IND.
AIR BAG IND.
VOLTS IND.
ABS IND.
CHANGE OIL IND.
LOW OIL LEVEL IND.
SERVICE ENGINE SOON IND.
CRUISE IND.
PASS KEY IND.
GATE AJAR IND. (WAGON ONLY)
LEFT TURN IND.
RIGHT TURN IND.
HI BEAM IND.
FASTEN BELTS IND.
ILLUM (6 BULBS)
HOT IN RUN, BULB TEST OR START
HOT AT ALL TIMES
I/P INDC FUSE 11 10A
CLUS CHI FUSE 33 10A
I/P FUSE BLOCK
INTERIOR LIGHTS SYSTEM
ANTI-THEFT SYSTEM
EXTERIOR LIGHTS SYSTEM
HEADLIGHTS SYSTEM
CRUISE CONTROL SYSTEM
WARNING SYSTEMS
STARTING/ CHARGING SYSTEM
SUPPLEMENTAL RESTRAINTS SYSTEM
ANTI-LOCK BRAKES SYSTEM
G200 (BASE OF LEFT "A" PILLAR, BEHIND KICK PAD)
WINDSHIELD WASHER SOLVENT LEVEL SWITCH (IN WASHER FLUID RESERVOIR)
G110 ENGINE COMPARTMENT, ON FRONT LEFT OF CYLINDER HEAD)
FUEL PUMP/ SENDER (MOUTED IN FUEL TANK)
ENGINE COOLANT TEMPERATURE GAUGE SENSOR (FORWARD LEFT SIDE OF ENGINE)
(WAGON) G999 (NEAR CENTER OF LEFT "D" PILLAR)
G402 (SEDAN) (LEFT REAR WHEELHOUSE, IN LUGGAGE COMPARTMENT)
BASE OR W/ TWILIGHT SENTINEL
W/ DRL
DAYTIME RUNNING LIGHT CONTROL MODULE (RIGHT "A" PILLAR, BEHIND KICK PAD)
BRAKE INPUT
PARK BRAKE SWITCH
BRAKE PRESSURE SWITCH (MOUNTED ON MASTER CYLINDER)
IGNITION SWITCH
ACCY
LOCK
OFF
RUN
START
BULB TEST
78287

Fig. 26: Instrument Cluster Circuit (1 of 2)

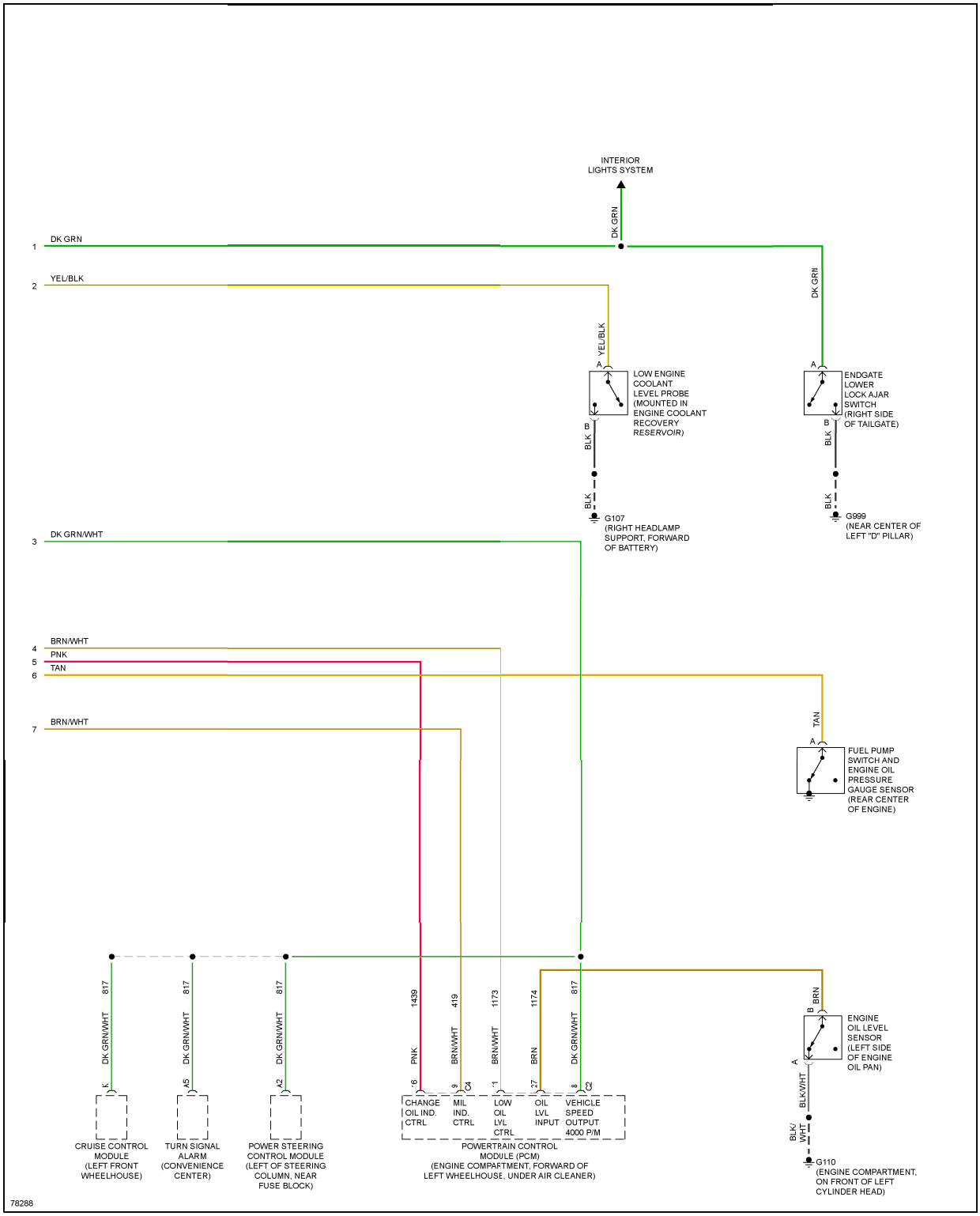
INTERIOR LIGHTS SYSTEM
DK GRN
1 DK GRN
2 YEL/BLK
YEL/BLK
LOW ENGINE COOLANT LEVEL PROBE (MOUNTED IN ENGINE COOLANT RECOVERY RESERVOIR)
BLK
G107 (RIGHT HEADLAMP SUPPORT, FORWARD OF BATTERY)
DK GRN
ENDGATE LOWER LOCK AJAR SWITCH (RIGHT SIDE OF TAILGATE)
BLK
G999 (NEAR CENTER OF LEFT "D" PILLAR)
3 DK GRN/WHT
4 BRN/WHT
5 PNK
6 TAN
7 BRN/WHT
TAN
FUEL PUMP SWITCH AND ENGINE OIL PRESSURE GAUGE SENSOR (REAR CENTER OF ENGINE)
DK GRN/WHT 817
CRUISE CONTROL MODULE (LEFT FRONT WHEELHOUSE)
TURN SIGNAL ALARM (CONVENIENCE CENTER)
POWER STEERING CONTROL MODULE (LEFT OF STEERING COLUMN, NEAR FUSE BLOCK)
PNK 1439
BRN/WHT 419
BRN/WHT 1173
BRN 1174
CHANGE OIL IND. CTRL
MIL IND. CTRL
LOW OIL LVL CTRL
OIL LVL INPUT
VEHICLE SPEED OUTPUT 4000 P/M
POWERTRAIN CONTROL MODULE (PCM) (ENGINE COMPARTMENT, FORWARD OF LEFT WHEELHOUSE, UNDER AIR CLEANER)
BRN
ENGINE OIL LEVEL SENSOR (LEFT SIDE OF ENGINE OIL PAN)
BLK/WHT
BLK/WHT
G110 (ENGINE COMPARTMENT, ON FRONT OF LEFT CYLINDER HEAD)
78288

Fig. 27: Instrument Cluster Circuit (2 of 2)

INTERIOR LIGHTS

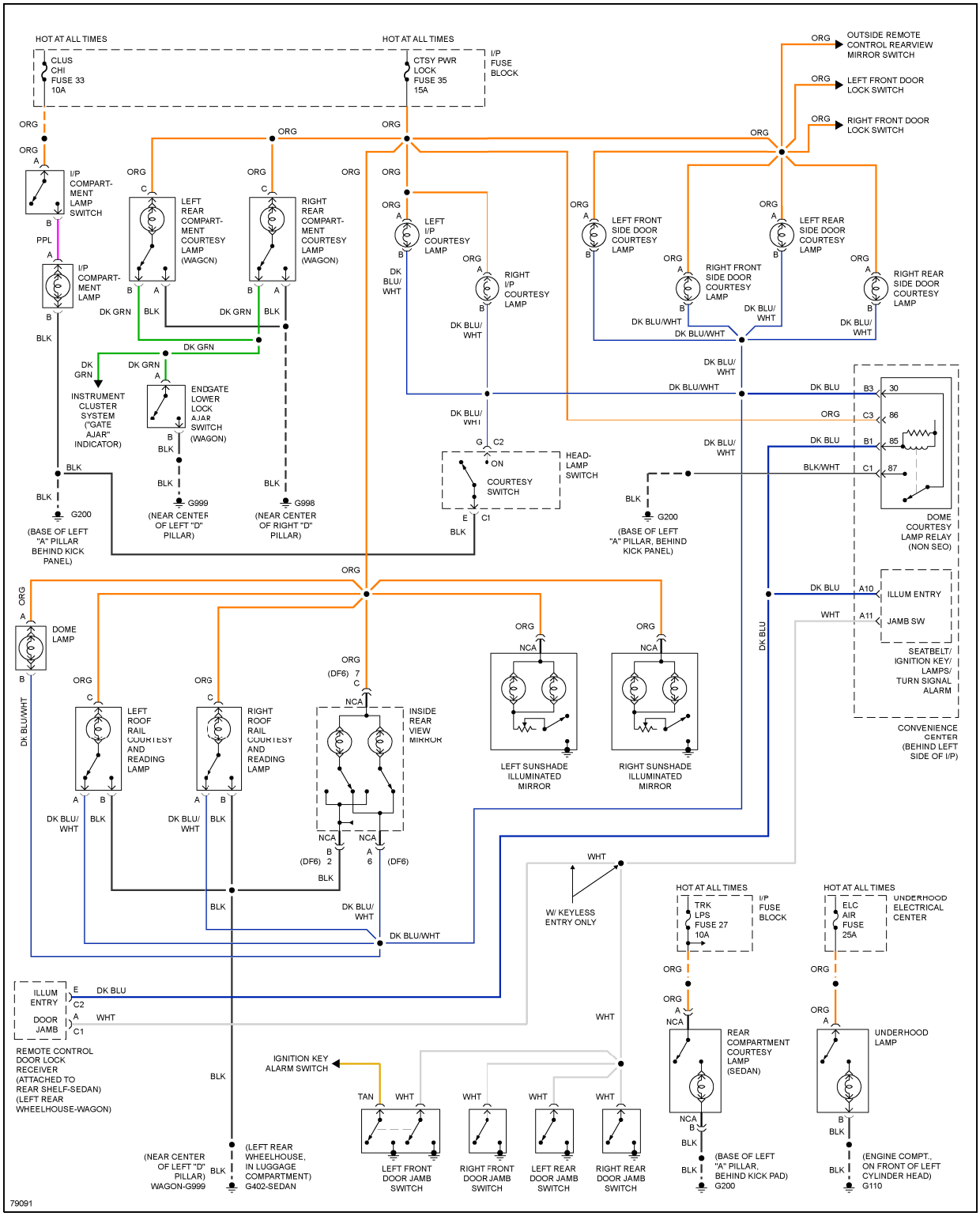
HOT AT ALL TIMES
CLUS CHI FUSE 33 10A
HOT AT ALL TIMES
CTSY PWR LOCK FUSE 35 15A
I/P FUSE BLOCK
OUTSIDE REMOTE CONTROL REARVIEW MIRROR SWITCH
LEFT FRONT DOOR LOCK SWITCH
RIGHT FRONT DOOR LOCK SWITCH
I/P COMPART-MENT LAMP SWITCH
I/P COMPART-MENT LAMP
LEFT REAR COMPART-MENT COURTESY LAMP (WAGON)
RIGHT REAR COMPART-MENT COURTESY LAMP (WAGON)
LEFT I/P COURTESY LAMP
RIGHT I/P COURTESY LAMP
LEFT FRONT SIDE DOOR COURTESY LAMP
RIGHT FRONT SIDE DOOR COURTESY LAMP
LEFT REAR SIDE DOOR COURTESY LAMP
RIGHT REAR SIDE DOOR COURTESY LAMP
INSTRUMENT CLUSTER SYSTEM ("GATE AJAR" INDICATOR)
ENDGATE LOWER LOCK AJAR SWITCH (WAGON)
G200 (BASE OF LEFT "A" PILLAR BEHIND KICK PANEL)
G999 (NEAR CENTER OF LEFT "D" PILLAR)
G998 (NEAR CENTER OF RIGHT "D" PILLAR)
HEAD-LAMP SWITCH
COURTESY SWITCH
G200 (BASE OF LEFT "A" PILLAR, BEHIND KICK PANEL)
DOME COURTESY LAMP RELAY (NON SEO)
DOME LAMP
LEFT ROOF RAIL COURTESY AND READING LAMP
RIGHT ROOF RAIL COURTESY AND READING LAMP
INSIDE REAR VIEW MIRROR
LEFT SUNSHADE ILLUMINATED MIRROR
RIGHT SUNSHADE ILLUMINATED MIRROR
ILLUM ENTRY
JAMB SW
SEATBELT/ IGNITION KEY/ LAMPS/ TURN SIGNAL ALARM
CONVENIENCE CENTER (BEHIND LEFT SIDE OF I/P)
W/ KEYLESS ENTRY ONLY
HOT AT ALL TIMES
TRK LPS FUSE 27 10A
I/P FUSE BLOCK
HOT AT ALL TIMES
ELC AIR FUSE 25A
UNDERHOOD ELECTRICAL CENTER
ILLUM ENTRY
DOOR JAMB
REMOTE CONTROL DOOR LOCK RECEIVER (ATTACHED TO REAR SHELF-SEDAN) (LEFT REAR WHEELHOUSE-WAGON)
IGNITION KEY ALARM SWITCH
REAR COMPARTMENT COURTESY LAMP (SEDAN)
UNDERHOOD LAMP
(NEAR CENTER OF LEFT "D" PILLAR) WAGON-G999
(LEFT REAR WHEELHOUSE, IN LUGGAGE COMPARTMENT) G402-SEDAN
LEFT FRONT DOOR JAMB SWITCH
RIGHT FRONT DOOR JAMB SWITCH
LEFT REAR DOOR JAMB SWITCH
RIGHT REAR DOOR JAMB SWITCH
(BASE OF LEFT "A" PILLAR, BEHIND KICK PAD) G200
(ENGINE COMPT., ON FRONT OF LEFT CYLINDER HEAD) G110
79091

Fig. 28: Courtesy Lamps Circuit

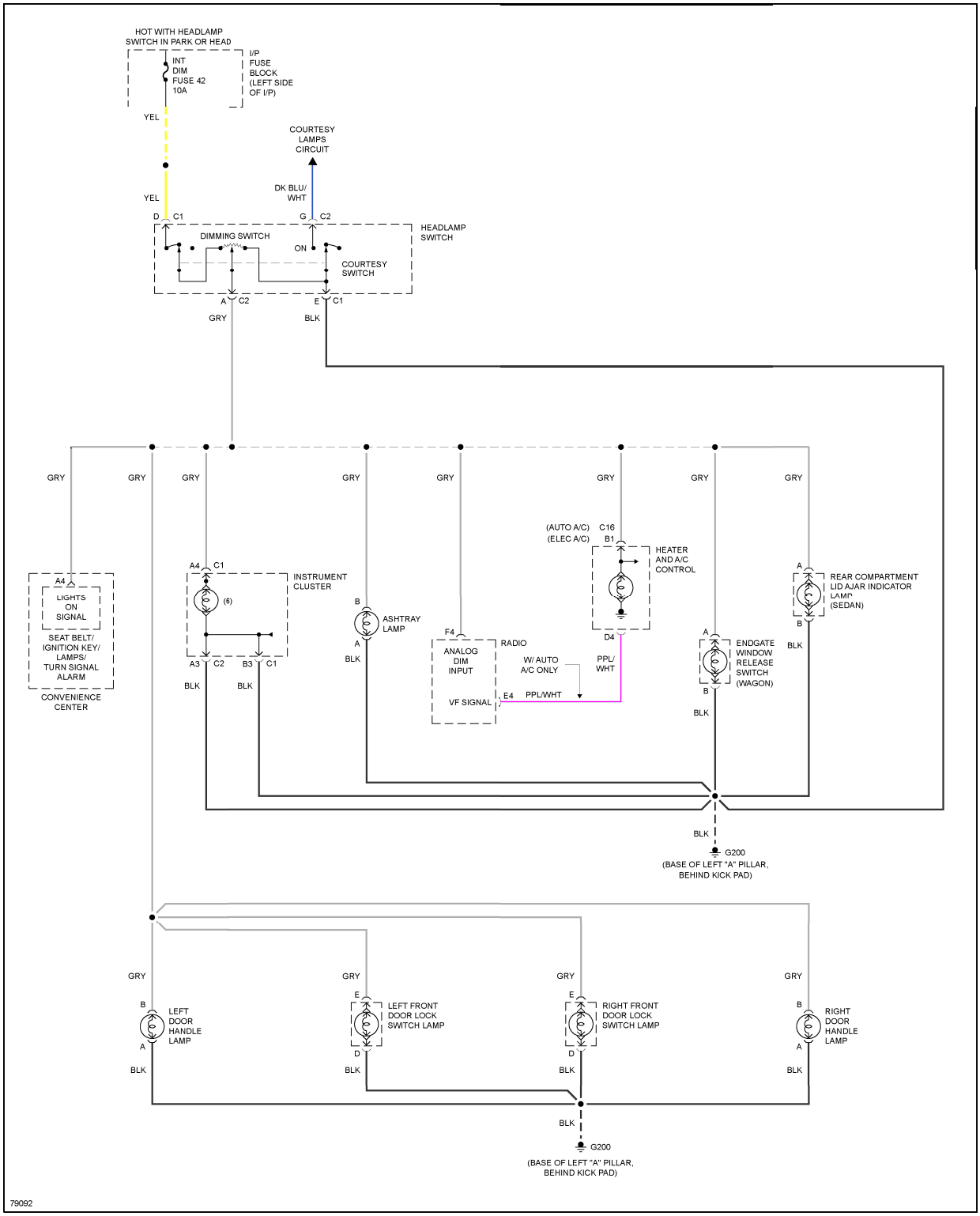
HOT WITH HEADLAMP SWITCH IN PARK OR HEAD
INT DIM FUSE 42 10A
I/P FUSE BLOCK (LEFT SIDE OF I/P)
YEL
COURTESY LAMPS CIRCUIT
DK BLU/ WHT
YEL
D C1
G C2
DIMMING SWITCH
ON
HEADLAMP SWITCH
COURTESY SWITCH
A C2
E C1
GRY
BLK
GRY
A4
LIGHTS ON SIGNAL
SEAT BELT/ IGNITION KEY/ LAMPS/ TURN SIGNAL ALARM
CONVENIENCE CENTER
A4 C1
(6)
INSTRUMENT CLUSTER
A3 C2 B3 C1
BLK
BLK
B
ASHTRAY LAMP
A
BLK
F4
ANALOG DIM INPUT
RADIO
VF SIGNAL
E4
PPL/WHT
W/ AUTO A/C ONLY
PPL/ WHT
(AUTO A/C) C16
(ELEC A/C) B1
HEATER AND A/C CONTROL
D4
A
ENDGATE WINDOW RELEASE SWITCH (WAGON)
B
BLK
A
REAR COMPARTMENT LID AJAR INDICATOR LAMP (SEDAN)
B
BLK
BLK
G200
(BASE OF LEFT "A" PILLAR, BEHIND KICK PAD)
B
LEFT DOOR HANDLE LAMP
A
BLK
E
LEFT FRONT DOOR LOCK SWITCH LAMP
D
BLK
E
RIGHT FRONT DOOR LOCK SWITCH LAMP
D
BLK
B
RIGHT DOOR HANDLE LAMP
A
BLK
BLK
G200
(BASE OF LEFT "A" PILLAR, BEHIND KICK PAD)
79092

Fig. 29: Instrument Illumination Circuit

MEMORY SYSTEMS

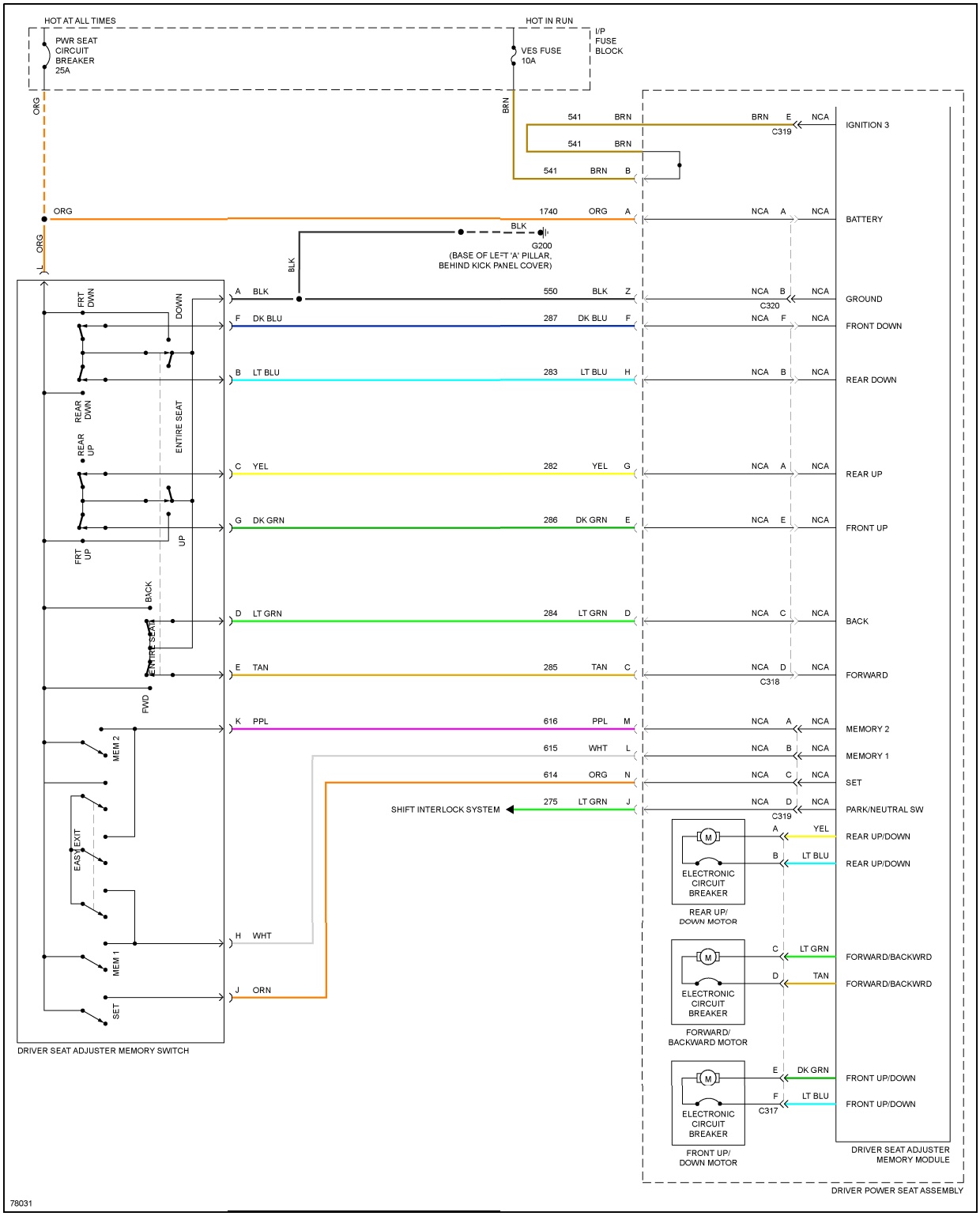
HOT AT ALL TIMES
HOT IN RUN
PWR SEAT CIRCUIT BREAKER 25A
VES FUSE 10A
I/P FUSE BLOCK
ORG
BRN
541 BRN
541 BRN
541 BRN
BRN E NCA
C319
IGNITION 3
ORG
1740 ORG A
NCA A NCA
BATTERY
BLK
G200
(BASE OF LEFT 'A' PILLAR, BEHIND KICK PANEL COVER)
A BLK
550 BLK Z
NCA B NCA
C320
GROUND
F DK BLU
287 DK BLU F
NCA F NCA
FRONT DOWN
B LT BLU
283 LT BLU H
NCA B NCA
REAR DOWN
C YEL
282 YEL G
NCA A NCA
REAR UP
G DK GRN
286 DK GRN E
NCA E NCA
FRONT UP
D LT GRN
284 LT GRN D
NCA C NCA
BACK
E TAN
285 TAN C
NCA D NCA
C318
FORWARD
K PPL
616 PPL M
NCA A NCA
MEMORY 2
615 WHT L
NCA B NCA
MEMORY 1
614 ORG N
NCA C NCA
SET
275 LT GRN J
NCA D NCA
C319
PARK/NEUTRAL SW
SHIFT INTERLOCK SYSTEM
A YEL
REAR UP/DOWN
B LT BLU
REAR UP/DOWN
ELECTRONIC CIRCUIT BREAKER
REAR UP/ DOWN MOTOR
C LT GRN
FORWARD/BACKWRD
D TAN
FORWARD/BACKWRD
ELECTRONIC CIRCUIT BREAKER
FORWARD/ BACKWARD MOTOR
E DK GRN
FRONT UP/DOWN
F LT BLU
FRONT UP/DOWN
C317
ELECTRONIC CIRCUIT BREAKER
FRONT UP/ DOWN MOTOR
DRIVER SEAT ADJUSTER MEMORY MODULE
DRIVER POWER SEAT ASSEMBLY
FRT DWN
DOWN
REAR DWN
REAR UP
ENTIRE SEAT
FRT UP
UP
BACK
ENTIRE SEAT
FWD
MEM 2
EASY EXIT
MEM 1
SET
H WHT
J ORN
DRIVER SEAT ADJUSTER MEMORY SWITCH
78031

Fig. 30: Memory Seat Circuit

POWER ANTENNA

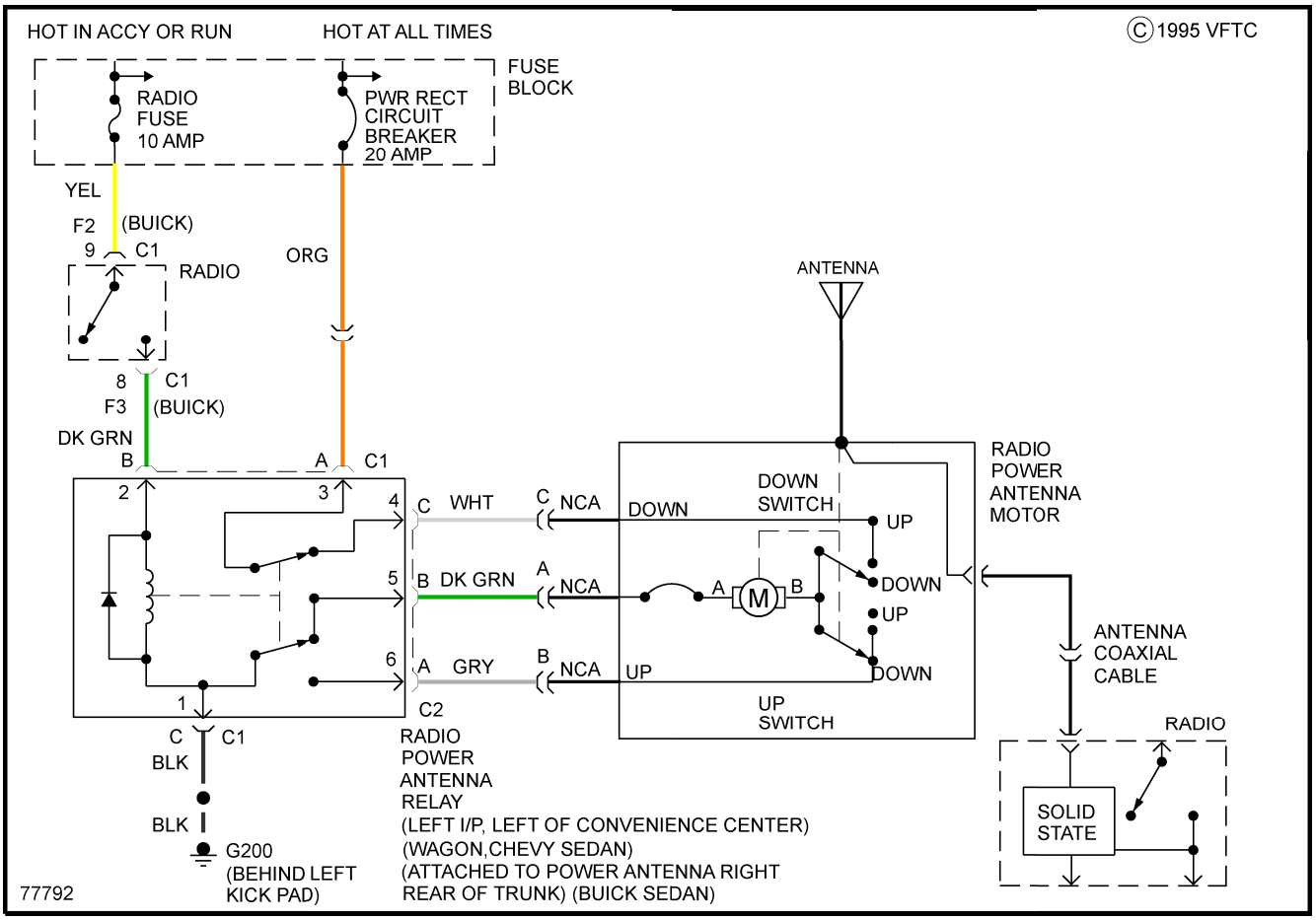
HOT IN ACCY OR RUN
HOT AT ALL TIMES
©1995 VFTC
FUSE BLOCK
RADIO FUSE 10 AMP
PWR RECT CIRCUIT BREAKER 20 AMP
YEL
F2
(BUICK)
9
C1
RADIO
ORG
ANTENNA
8
C1
F3
(BUICK)
DK GRN
B
A
C1
2
3
4
C
WHT
C
NCA
DOWN
DOWN SWITCH
UP
RADIO POWER ANTENNA MOTOR
5
B
DK GRN
A
NCA
A
M
B
DOWN
UP
ANTENNA COAXIAL CABLE
6
A
GRY
B
NCA
UP
DOWN
UP SWITCH
1
C2
C
C1
BLK
RADIO POWER ANTENNA RELAY
(LEFT I/P, LEFT OF CONVENIENCE CENTER)
(WAGON,CHEVY SEDAN)
(ATTACHED TO POWER ANTENNA RIGHT REAR OF TRUNK) (BUICK SEDAN)
RADIO
SOLID STATE
BLK
G200
(BEHIND LEFT KICK PAD)
77792

Fig. 31: Power Antenna Circuit

POWER DISTRIBUTION

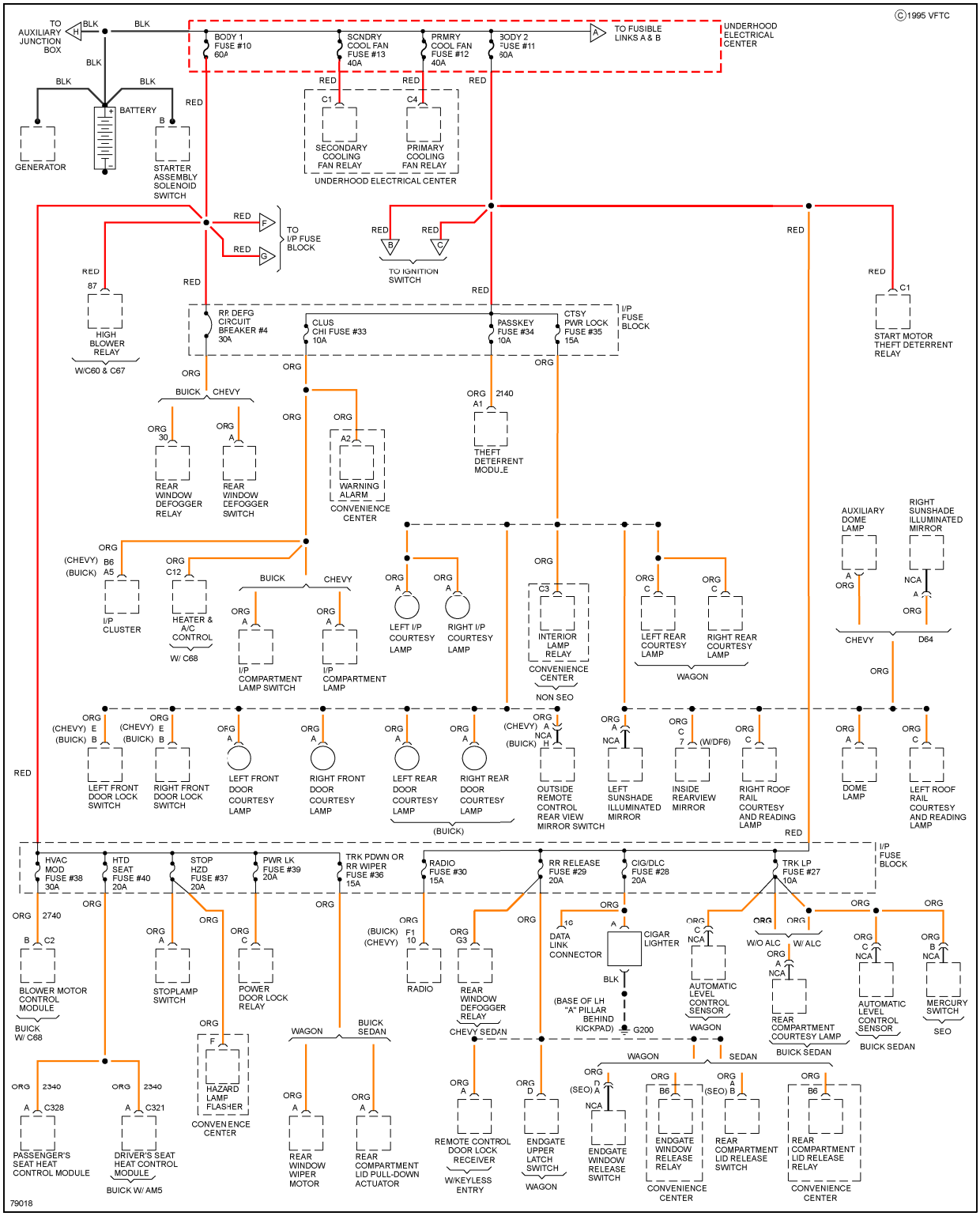
©1995 VFTC
TO AUXILIARY JUNCTION BOX
BLK
BODY 1 FUSE #10 60A
SCNDRY COOL FAN FUSE #13 40A
PRMRY COOL FAN FUSE #12 40A
BODY 2 FUSE #11 50A
TO FUSIBLE LINKS A & B
UNDERHOOD ELECTRICAL CENTER
BATTERY
GENERATOR
STARTER ASSEMBLY SOLENOID SWITCH
RED
SECONDARY COOLING FAN RELAY
PRIMARY COOLING FAN RELAY
UNDERHOOD ELECTRICAL CENTER
TO I/P FUSE BLOCK
TO IGNITION SWITCH
HIGH BLOWER RELAY
W/C60 & C67
RR DEFG CIRCUIT BREAKER #4 30A
CLUS CHI FUSE #33 10A
PASSKEY FUSE #34 10A
CTSY PWR LOCK FUSE #35 15A
I/P FUSE BLOCK
START MOTOR THEFT DETERRENT RELAY
ORG
BUICK
CHEVY
REAR WINDOW DEFOGGER RELAY
REAR WINDOW DEFOGGER SWITCH
WARNING ALARM
CONVENIENCE CENTER
THEFT DETERRENT MODULE
I/P CLUSTER
HEATER & A/C CONTROL
W/ C68
I/P COMPARTMENT LAMP SWITCH
I/P COMPARTMENT LAMP
LEFT I/P COURTESY LAMP
RIGHT I/P COURTESY LAMP
INTERIOR LAMP RELAY
CONVENIENCE CENTER
NON SEO
LEFT REAR COURTESY LAMP
RIGHT REAR COURTESY LAMP
WAGON
AUXILIARY DOME LAMP
RIGHT SUNSHADE ILLUMINATED MIRROR
CHEVY
D64
LEFT FRONT DOOR LOCK SWITCH
RIGHT FRONT DOOR LOCK SWITCH
LEFT FRONT DOOR COURTESY LAMP
RIGHT FRONT DOOR COURTESY LAMP
LEFT REAR DOOR COURTESY LAMP
RIGHT REAR DOOR COURTESY LAMP
(BUICK)
OUTSIDE REMOTE CONTROL REAR VIEW MIRROR SWITCH
LEFT SUNSHADE ILLUMINATED MIRROR
INSIDE REARVIEW MIRROR
RIGHT ROOF RAIL COURTESY AND READING LAMP
DOME LAMP
LEFT ROOF RAIL COURTESY AND READING LAMP
HVAC MOD FUSE #38 30A
HTD SEAT FUSE #40 20A
STOP HZD FUSE #37 20A
PWR LK FUSE #39 20A
TRK PDWN OR RR WIPER FUSE #36 15A
RADIO FUSE #30 15A
RR RELEASE FUSE #29 20A
CIG/DLC FUSE #28 20A
TRK LP FUSE #27 10A
BLOWER MOTOR CONTROL MODULE
BUICK W/ C68
STOPLAMP SWITCH
POWER DOOR LOCK RELAY
RADIO
REAR WINDOW DEFOGGER RELAY
CHEVY SEDAN
DATA LINK CONNECTOR
CIGAR LIGHTER
(BASE OF LH "A" PILLAR BEHIND KICKPAD)
G200
AUTOMATIC LEVEL CONTROL SENSOR
W/O ALC
W/ ALC
REAR COMPARTMENT COURTESY LAMP
BUICK SEDAN
MERCURY SWITCH
SEO
HAZARD LAMP FLASHER
CONVENIENCE CENTER
WAGON
BUICK SEDAN
SEDAN
PASSENGER'S SEAT HEAT CONTROL MODULE
DRIVER'S SEAT HEAT CONTROL MODULE
BUICK W/ AM5
REAR WINDOW WIPER MOTOR
REAR COMPARTMENT LID PULL-DOWN ACTUATOR
REMOTE CONTROL DOOR LOCK RECEIVER
W/KEYLESS ENTRY
ENDGATE UPPER LATCH SWITCH
ENDGATE WINDOW RELEASE SWITCH
ENDGATE WINDOW RELEASE RELAY
REAR COMPARTMENT LID RELEASE SWITCH
REAR COMPARTMENT LID RELEASE RELAY
79018

Fig. 32: Power Distribution Circuit (1 of 4)

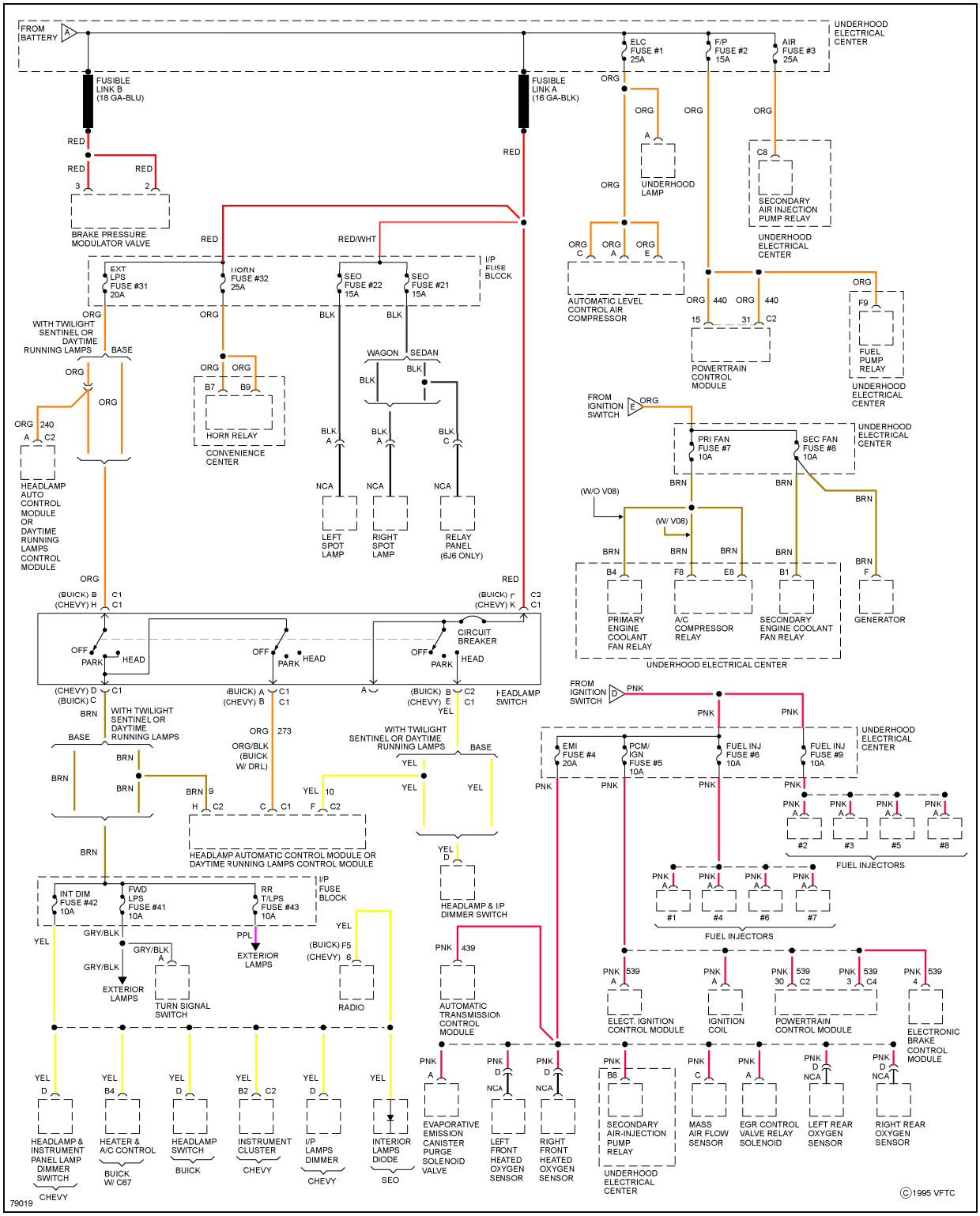
FROM BATTERY
UNDERHOOD ELECTRICAL CENTER
ELC FUSE #1 25A
F/P FUSE #2 15A
AIR FUSE #3 25A
FUSIBLE LINK B (18 GA-BLU)
FUSIBLE LINK A (16 GA-BLK)
UNDERHOOD LAMP
SECONDARY AIR INJECTION PUMP RELAY
BRAKE PRESSURE MODULATOR VALVE
I/P FUSE BLOCK
EXT LPS FUSE #31 20A
HORN FUSE #32 25A
SEO FUSE #22 15A
SEO FUSE #21 15A
AUTOMATIC LEVEL CONTROL AIR COMPRESSOR
POWERTRAIN CONTROL MODULE
FUEL PUMP RELAY
WITH TWILIGHT SENTINEL OR DAYTIME RUNNING LAMPS
HORN RELAY
CONVENIENCE CENTER
WAGON
SEDAN
HEADLAMP AUTO CONTROL MODULE OR DAYTIME RUNNING LAMPS CONTROL MODULE
LEFT SPOT LAMP
RIGHT SPOT LAMP
RELAY PANEL (6J6 ONLY)
FROM IGNITION SWITCH
PRI FAN FUSE #7 10A
SEC FAN FUSE #8 10A
(W/O V08)
(W/ V08)
PRIMARY ENGINE COOLANT FAN RELAY
A/C COMPRESSOR RELAY
SECONDARY ENGINE COOLANT FAN RELAY
GENERATOR
CIRCUIT BREAKER
HEADLAMP SWITCH
HEADLAMP AUTOMATIC CONTROL MODULE OR DAYTIME RUNNING LAMPS CONTROL MODULE
EMI FUSE #4 20A
PCM/IGN FUSE #5 10A
FUEL INJ FUSE #6 10A
FUEL INJ FUSE #9 10A
FUEL INJECTORS
INT DIM FUSE #42 10A
FWD LPS FUSE #41 10A
RR T/LPS FUSE #43 10A
EXTERIOR LAMPS
TURN SIGNAL SWITCH
RADIO
HEADLAMP & I/P DIMMER SWITCH
AUTOMATIC TRANSMISSION CONTROL MODULE
ELECT IGNITION CONTROL MODULE
IGNITION COIL
POWERTRAIN CONTROL MODULE
ELECTRONIC BRAKE CONTROL MODULE
HEADLAMP & INSTRUMENT PANEL LAMP DIMMER SWITCH
HEATER & A/C CONTROL
HEADLAMP SWITCH
INSTRUMENT CLUSTER
I/P LAMPS DIMMER
INTERIOR LAMPS DIODE
EVAPORATIVE EMISSION CANISTER PURGE SOLENOID VALVE
LEFT FRONT HEATED OXYGEN SENSOR
RIGHT FRONT HEATED OXYGEN SENSOR
SECONDARY AIR-INJECTION PUMP RELAY
MASS AIR FLOW SENSOR
EGR CONTROL VALVE RELAY SOLENOID
LEFT REAR OXYGEN SENSOR
RIGHT REAR OXYGEN SENSOR
79019
©1995 VFTC

Fig. 33: Power Distribution Circuit (2 of 4)

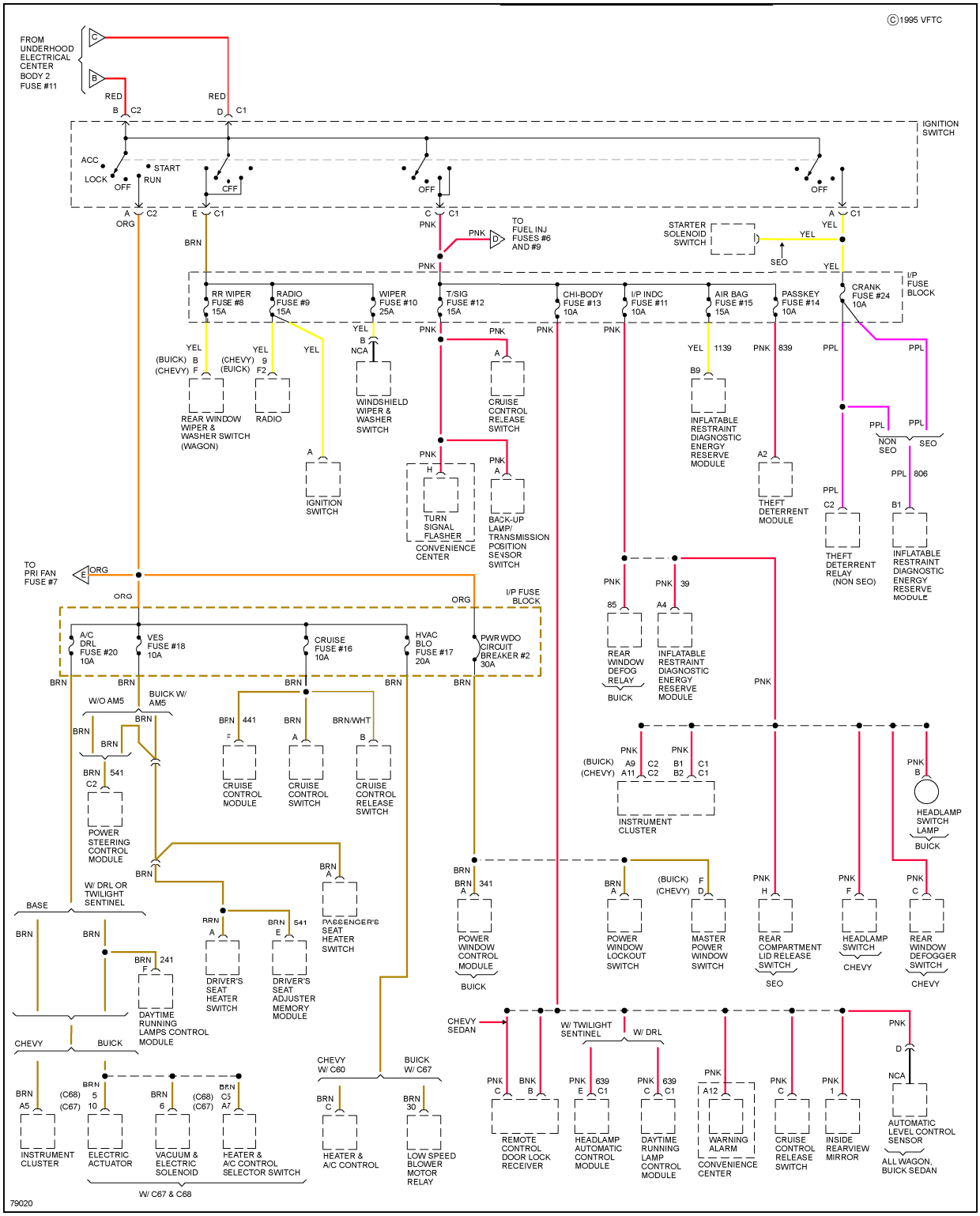
©1995 VFTC
FROM UNDERHOOD ELECTRICAL CENTER BODY 2 FUSE #11
IGNITION SWITCH
ACC
LOCK
OFF
START
RUN
TO FUEL INJ FUSES #6 AND #9
STARTER SOLENOID SWITCH
SEO
I/P FUSE BLOCK
RR WIPER FUSE #8 15A
RADIO FUSE #9 15A
WIPER FUSE #10 25A
T/SIG FUSE #12 15A
CHI-BODY FUSE #13 10A
I/P INDC FUSE #11 10A
AIR BAG FUSE #15 15A
PASSKEY FUSE #14 10A
CRANK FUSE #24 10A
REAR WINDOW WIPER & WASHER SWITCH (WAGON)
RADIO
WINDSHIELD WIPER & WASHER SWITCH
CRUISE CONTROL RELEASE SWITCH
INFLATABLE RESTRAINT DIAGNOSTIC ENERGY RESERVE MODULE
NON SEO
SEO
IGNITION SWITCH
TURN SIGNAL FLASHER
CONVENIENCE CENTER
BACK-UP LAMP/ TRANSMISSION POSITION SENSOR SWITCH
THEFT DETERRENT MODULE
THEFT DETERRENT RELAY (NON SEO)
INFLATABLE RESTRAINT DIAGNOSTIC ENERGY RESERVE MODULE
TO PRI FAN FUSE #7
I/P FUSE BLOCK
A/C DRL FUSE #20 10A
VES FUSE #18 10A
CRUISE FUSE #16 10A
HVAC BLO FUSE #17 20A
PWR WDO CIRCUIT BREAKER #2 30A
REAR WINDOW DEFOG RELAY
BUICK
INFLATABLE RESTRAINT DIAGNOSTIC ENERGY RESERVE MODULE
W/O AM5
BUICK W/ AM5
CRUISE CONTROL MODULE
CRUISE CONTROL SWITCH
CRUISE CONTROL RELEASE SWITCH
POWER STEERING CONTROL MODULE
INSTRUMENT CLUSTER
HEADLAMP SWITCH LAMP
BUICK
W/ DRL OR TWILIGHT SENTINEL
BASE
PASSENGER'S SEAT HEATER SWITCH
DRIVER'S SEAT HEATER SWITCH
DRIVER'S SEAT ADJUSTER MEMORY MODULE
POWER WINDOW CONTROL MODULE
BUICK
POWER WINDOW LOCKOUT SWITCH
MASTER POWER WINDOW SWITCH
REAR COMPARTMENT LID RELEASE SWITCH
SEO
HEADLAMP SWITCH
CHEVY
REAR WINDOW DEFOGGER SWITCH
CHEVY
DAYTIME RUNNING LAMPS CONTROL MODULE
CHEVY
BUICK
CHEVY SEDAN
W/ TWILIGHT SENTINEL
W/ DRL
CHEVY W/ C60
BUICK W/ C67
INSTRUMENT CLUSTER
ELECTRIC ACTUATOR
VACUUM & ELECTRIC SOLENOID
HEATER & A/C CONTROL SELECTOR SWITCH
HEATER & A/C CONTROL
LOW SPEED BLOWER MOTOR RELAY
REMOTE CONTROL DOOR LOCK RECEIVER
HEADLAMP AUTOMATIC CONTROL MODULE
DAYTIME RUNNING LAMP CONTROL MODULE
WARNING ALARM
CONVENIENCE CENTER
CRUISE CONTROL RELEASE SWITCH
INSIDE REARVIEW MIRROR
AUTOMATIC LEVEL CONTROL SENSOR
ALL WAGON, BUICK SEDAN
W/ C67 & C68
79020

Fig. 34: Power Distribution Circuit (3 of 4)

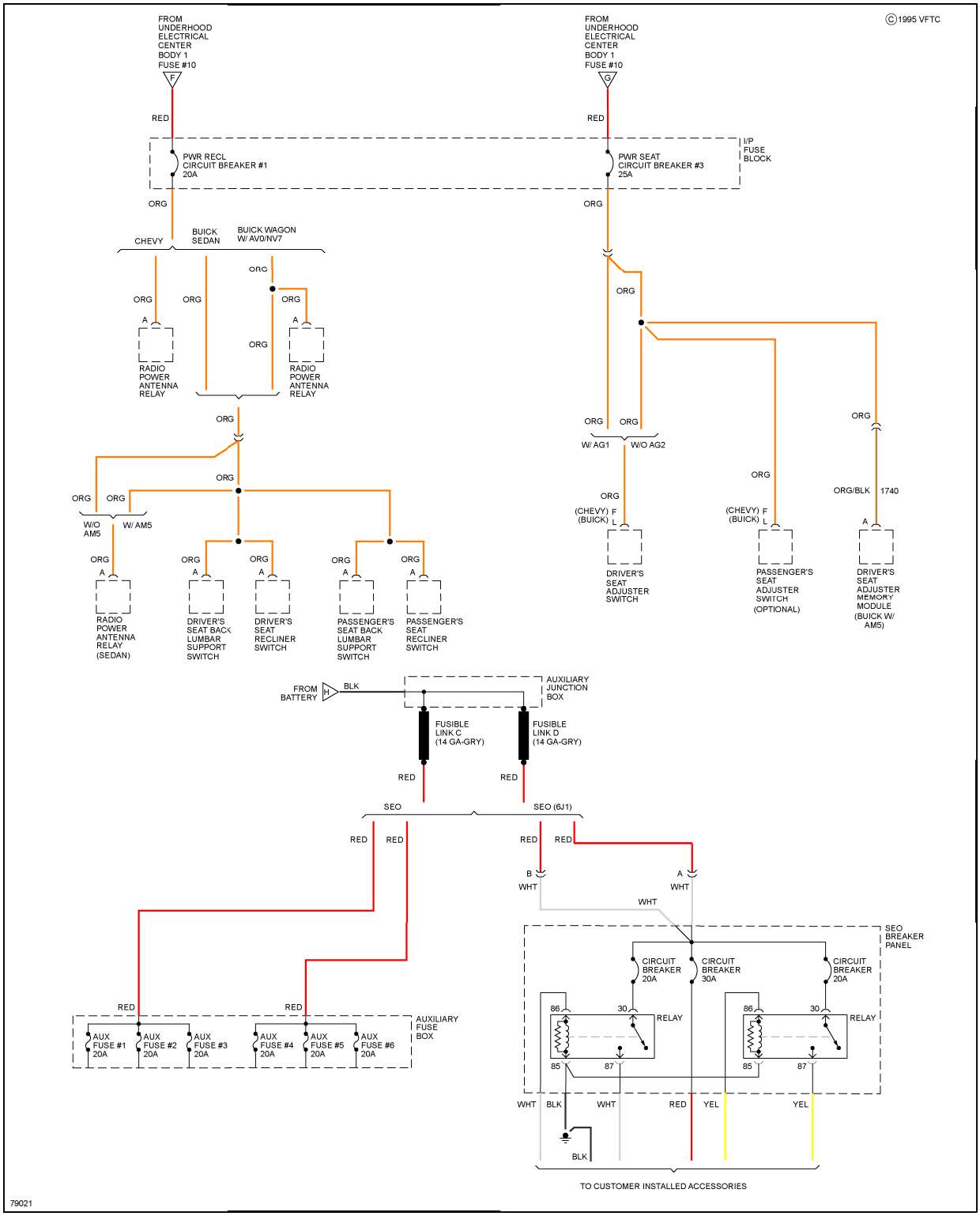
©1995 VFTC
FROM UNDERHOOD ELECTRICAL CENTER BODY 1 FUSE #10
F
G
RED
I/P FUSE BLOCK
PWR RECL CIRCUIT BREAKER #1 20A
PWR SEAT CIRCUIT BREAKER #3 25A
ORG
CHEVY
BUICK SEDAN
BUICK WAGON W/ AV0/NV7
A
RADIO POWER ANTENNA RELAY
W/ AG1
W/O AG2
W/O AM5
W/ AM5
(CHEVY) F
(BUICK) L
DRIVER'S SEAT ADJUSTER SWITCH
PASSENGER'S SEAT ADJUSTER SWITCH (OPTIONAL)
ORG/BLK
1740
DRIVER'S SEAT ADJUSTER MEMORY MODULE (BUICK W/ AM5)
RADIO POWER ANTENNA RELAY (SEDAN)
DRIVER'S SEAT BACK LUMBAR SUPPORT SWITCH
DRIVER'S SEAT RECLINER SWITCH
PASSENGER'S SEAT BACK LUMBAR SUPPORT SWITCH
PASSENGER'S SEAT RECLINER SWITCH
FROM BATTERY
H
BLK
AUXILIARY JUNCTION BOX
FUSIBLE LINK C (14 GA-GRY)
FUSIBLE LINK D (14 GA-GRY)
SEO
SEO (6J1)
B
WHT
SEO BREAKER PANEL
CIRCUIT BREAKER 20A
CIRCUIT BREAKER 30A
86
30
85
87
RELAY
AUX FUSE #1 20A
AUX FUSE #2 20A
AUX FUSE #3 20A
AUX FUSE #4 20A
AUX FUSE #5 20A
AUX FUSE #6 20A
AUXILIARY FUSE BOX
YEL
TO CUSTOMER INSTALLED ACCESSORIES
79021

Fig. 35: Power Distribution Circuit (4 of 4)

POWER DOOR LOCKS

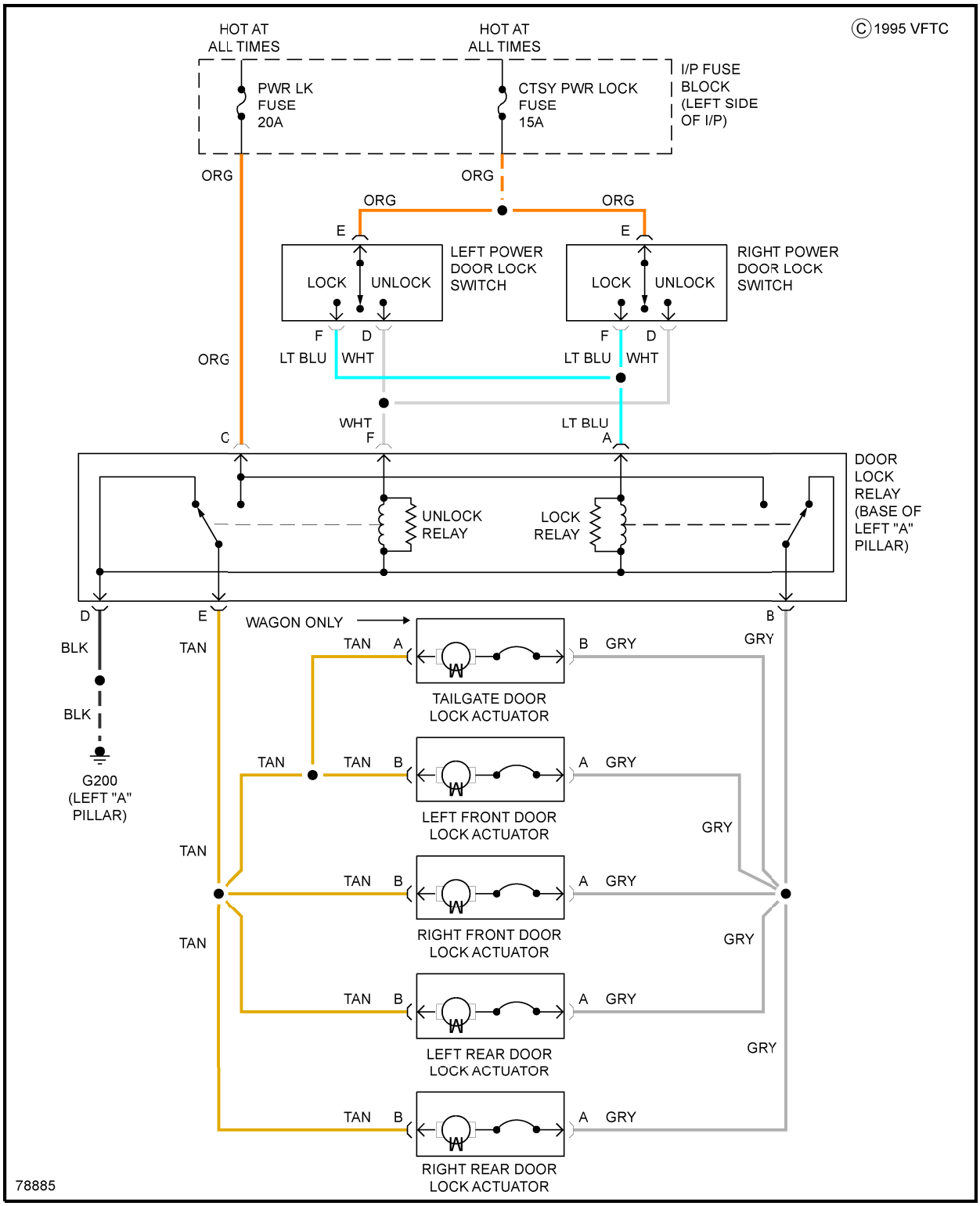
HOT AT ALL TIMES
HOT AT ALL TIMES
© 1995 VFTC
PWR LK FUSE 20A
CTSY PWR LOCK FUSE 15A
I/P FUSE BLOCK (LEFT SIDE OF I/P)
ORG
ORG
ORG
ORG
E
E
LEFT POWER DOOR LOCK SWITCH
LOCK
UNLOCK
RIGHT POWER DOOR LOCK SWITCH
LOCK
UNLOCK
F
D
F
D
ORG
LT BLU
WHT
LT BLU
WHT
WHT
F
LT BLU
A
C
DOOR LOCK RELAY (BASE OF LEFT "A" PILLAR)
UNLOCK RELAY
LOCK RELAY
D
E
B
WAGON ONLY
BLK
TAN
TAN
A
B
GRY
GRY
TAILGATE DOOR LOCK ACTUATOR
BLK
TAN
TAN
B
A
GRY
G200 (LEFT "A" PILLAR)
LEFT FRONT DOOR LOCK ACTUATOR
GRY
TAN
TAN
B
A
GRY
RIGHT FRONT DOOR LOCK ACTUATOR
TAN
GRY
TAN
B
A
GRY
LEFT REAR DOOR LOCK ACTUATOR
GRY
TAN
B
A
GRY
RIGHT REAR DOOR LOCK ACTUATOR
78885

Fig. 36: Door Lock Circuit

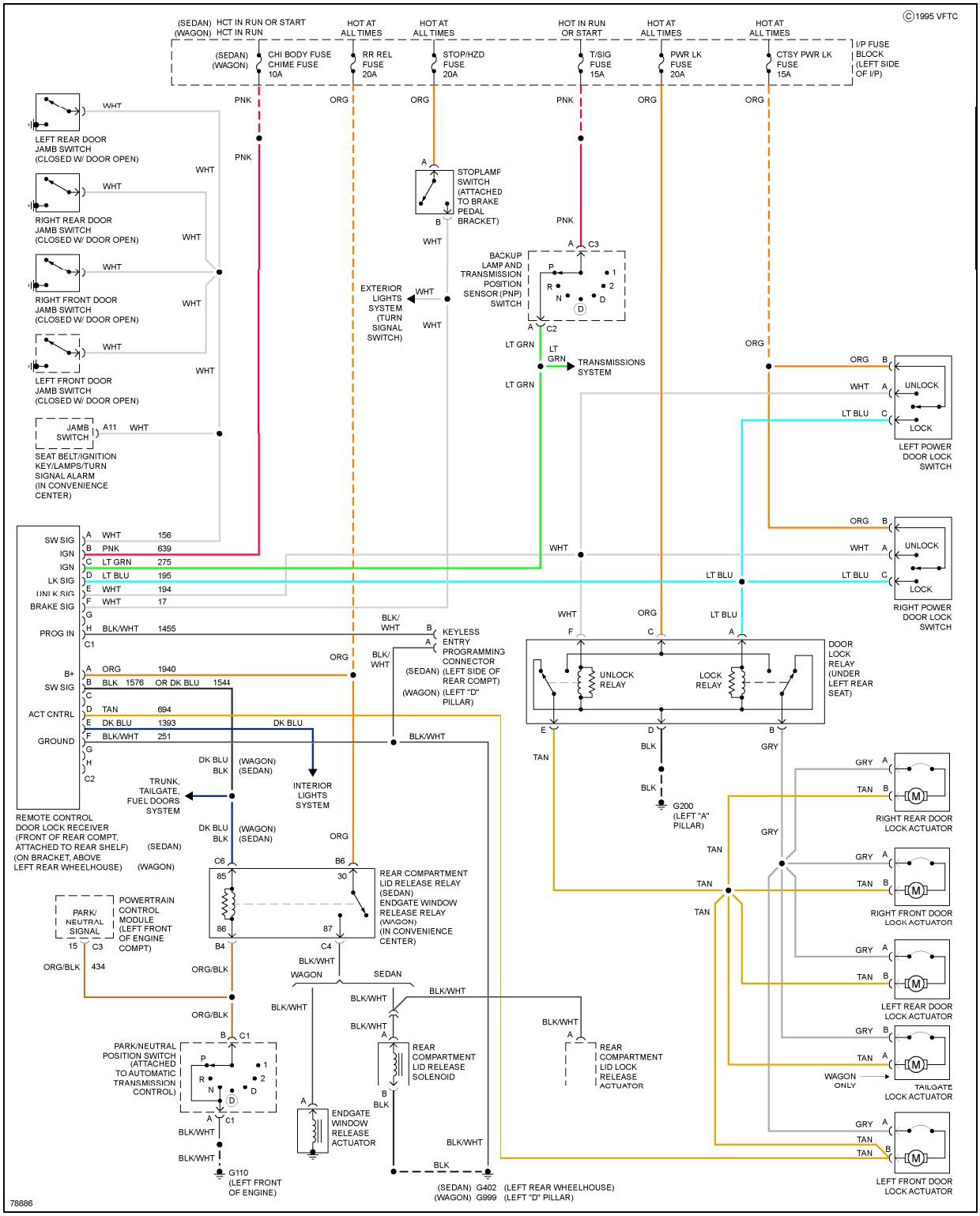
©1995 VFTC
(SEDAN) HCT IN RUN OR START
(WAGON) HCT IN RUN
HOT AT ALL TIMES
HOT IN RUN OR START
(SEDAN) (WAGON) CHI BODY FUSE CHIME FUSE 10A
RR REL FUSE 20A
STOP/HZD FUSE 20A
T/SIG FUSE 15A
PWR LK FUSE 20A
CTSY PWR LK FUSE 15A
I/P FUSE BLOCK (LEFT SIDE OF I/P)
LEFT REAR DOOR JAMB SWITCH (CLOSED W/ DOOR OPEN)
RIGHT REAR DOOR JAMB SWITCH (CLOSED W/ DOOR OPEN)
RIGHT FRONT DOOR JAMB SWITCH (CLOSED W/ DOOR OPEN)
LEFT FRONT DOOR JAMB SWITCH (CLOSED W/ DOOR OPEN)
JAMB SWITCH
SEAT BELT/IGNITION KEY/LAMPS/TURN SIGNAL ALARM (IN CONVENIENCE CENTER)
STOPLAMP SWITCH (ATTACHED TO BRAKE PEDAL BRACKET)
BACKUP LAMP AND TRANSMISSION POSITION SENSOR (PNP) SWITCH
EXTERIOR LIGHTS SYSTEM (TURN SIGNAL SWITCH)
TRANSMISSIONS SYSTEM
LEFT POWER DOOR LOCK SWITCH
RIGHT POWER DOOR LOCK SWITCH
UNLOCK
LOCK
SW SIG
IGN
LK SIG
UNLK SIG
BRAKE SIG
PROG IN
B+
ACT CNTRL
GROUND
REMOTE CONTROL DOOR LOCK RECEIVER (FRONT OF REAR COMPT, ATTACHED TO REAR SHELF) (ON BRACKET, ABOVE LEFT REAR WHEELHOUSE)
KEYLESS ENTRY PROGRAMMING CONNECTOR
(SEDAN) (LEFT SIDE OF REAR COMPT)
(WAGON) (LEFT "D" PILLAR)
DOOR LOCK RELAY (UNDER LEFT REAR SEAT)
UNLOCK RELAY
LOCK RELAY
G200 (LEFT "A" PILLAR)
TRUNK, TAILGATE, FUEL DOORS SYSTEM
INTERIOR LIGHTS SYSTEM
RIGHT REAR DOOR LOCK ACTUATOR
RIGHT FRONT DOOR LOCK ACTUATOR
LEFT REAR DOOR LOCK ACTUATOR
TAILGATE LOCK ACTUATOR
LEFT FRONT DOOR LOCK ACTUATOR
WAGON ONLY
REAR COMPARTMENT LID RELEASE RELAY (SEDAN) ENDGATE WINDOW RELEASE RELAY (WAGON) (IN CONVENIENCE CENTER)
POWERTRAIN CONTROL MODULE (LEFT FRONT OF ENGINE COMPT)
PARK/ NEUTRAL SIGNAL
PARK/NEUTRAL POSITION SWITCH (ATTACHED TO AUTOMATIC TRANSMISSION CONTROL)
REAR COMPARTMENT LID RELEASE SOLENOID
REAR COMPARTMENT LID LOCK RELEASE ACTUATOR
ENDGATE WINDOW RELEASE ACTUATOR
G110 (LEFT FRONT OF ENGINE)
(SEDAN) (WAGON) G402 G999 (LEFT REAR WHEELHOUSE) (LEFT "D" PILLAR)
78886

Fig. 37: Keyless Entry Circuit

POWER MIRRORS

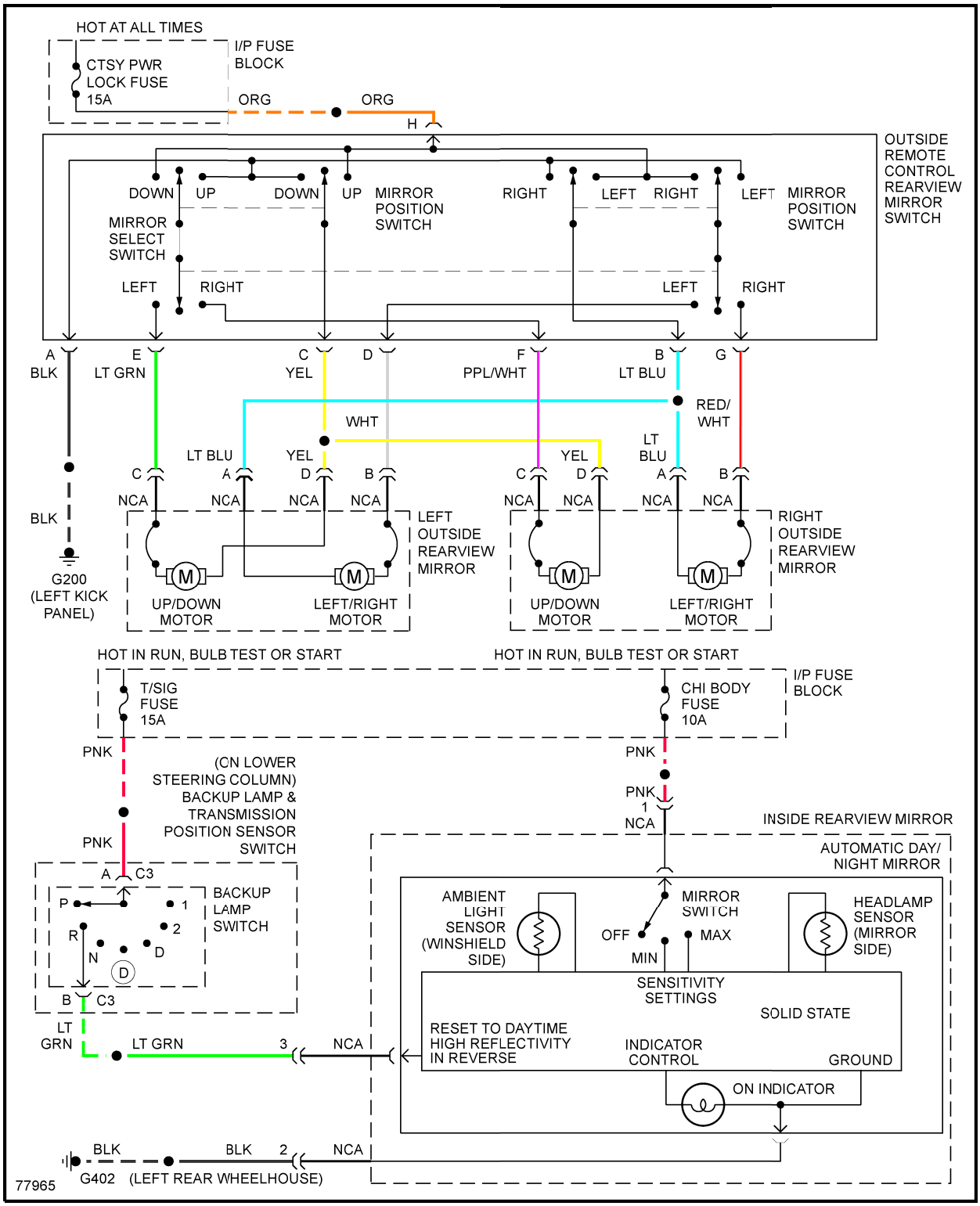
HOT AT ALL TIMES
I/P FUSE BLOCK
CTSY PWR LOCK FUSE 15A
ORG
ORG
H
OUTSIDE REMOTE CONTROL REARVIEW MIRROR SWITCH
DOWN
UP
DOWN
UP
MIRROR POSITION SWITCH
RIGHT
LEFT
RIGHT
LEFT
MIRROR POSITION SWITCH
MIRROR SELECT SWITCH
LEFT
RIGHT
LEFT
RIGHT
A BLK
E LT GRN
C YEL
D
F PPL/WHT
B LT BLU
G
RED/ WHT
WHT
LT BLU
YEL
YEL
LT BLU
C
A
D
B
C
D
A
B
NCA
BLK
G200 (LEFT KICK PANEL)
LEFT OUTSIDE REARVIEW MIRROR
RIGHT OUTSIDE REARVIEW MIRROR
UP/DOWN MOTOR
LEFT/RIGHT MOTOR
UP/DOWN MOTOR
LEFT/RIGHT MOTOR
HOT IN RUN, BULB TEST OR START
HOT IN RUN, BULB TEST OR START
I/P FUSE BLOCK
T/SIG FUSE 15A
CHI BODY FUSE 10A
PNK
PNK
(CN LOWER STEERING COLUMN) BACKUP LAMP & TRANSMISSION POSITION SENSOR SWITCH
PNK
1
NCA
INSIDE REARVIEW MIRROR
AUTOMATIC DAY/ NIGHT MIRROR
A C3
BACKUP LAMP SWITCH
P
R
N
D
1
2
D
B C3
AMBIENT LIGHT SENSOR (WINSHIELD SIDE)
MIRROR SWITCH
OFF
MIN
MAX
HEADLAMP SENSOR (MIRROR SIDE)
SENSITIVITY SETTINGS
SOLID STATE
RESET TO DAYTIME HIGH REFLECTIVITY IN REVERSE
INDICATOR CONTROL
GROUND
ON INDICATOR
LT GRN
LT GRN
3
NCA
BLK
BLK
2
NCA
G402 (LEFT REAR WHEELHOUSE)
77965

Fig. 38: Power Mirror Circuit

POWER SEATS

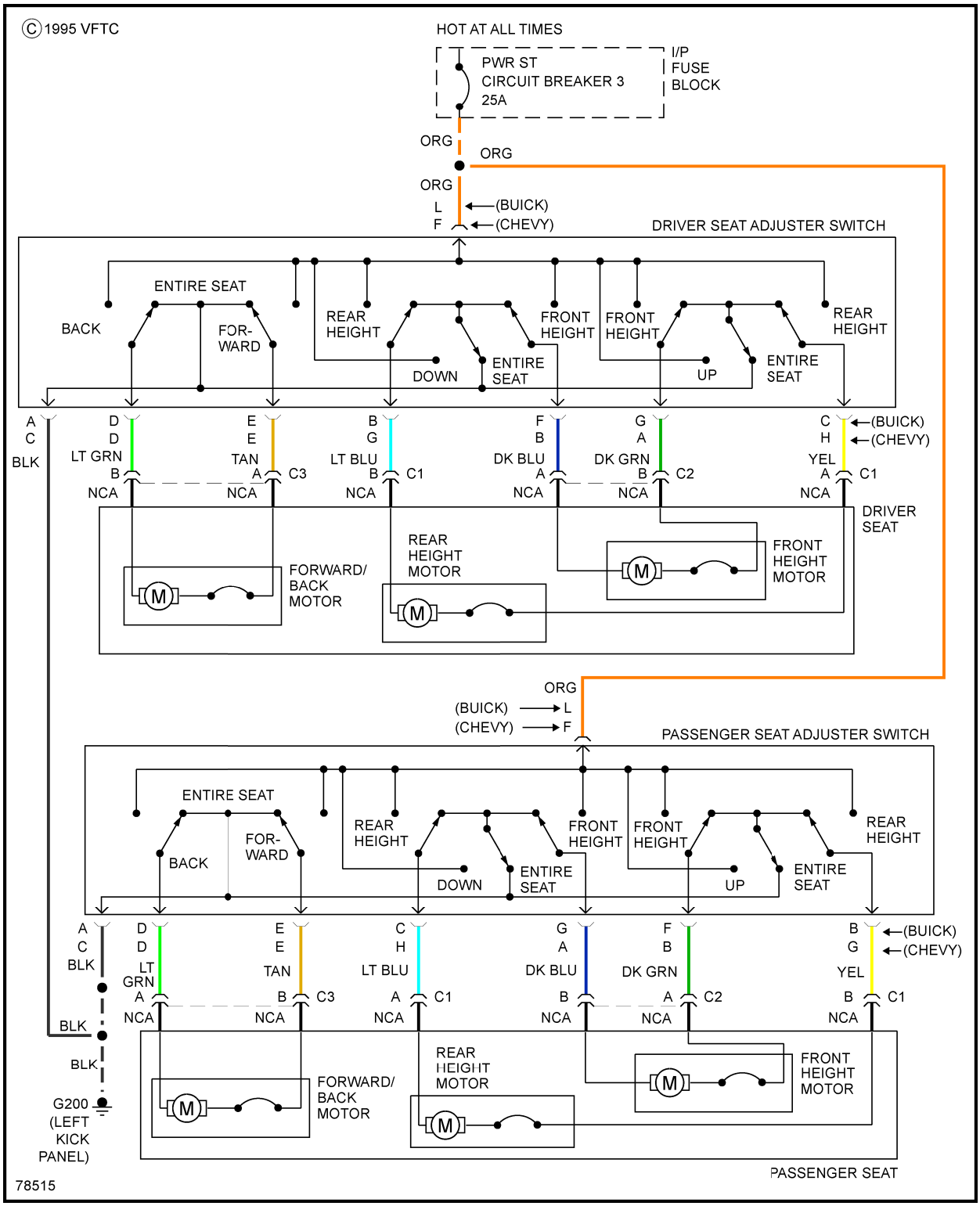
©1995 VFTC
HOT AT ALL TIMES
PWR ST
CIRCUIT BREAKER 3
25A
I/P
FUSE
BLOCK
ORG
ORG
ORG
L
F
(BUICK)
(CHEVY)
DRIVER SEAT ADJUSTER SWITCH
ENTIRE SEAT
BACK
FOR-
WARD
REAR
HEIGHT
DOWN
ENTIRE
SEAT
FRONT
HEIGHT
FRONT
HEIGHT
UP
ENTIRE
SEAT
REAR
HEIGHT
A
C
BLK
D
D
LT GRN
B
NCA
E
E
TAN
A
NCA
C3
B
G
LT BLU
B
NCA
C1
F
B
DK BLU
A
NCA
G
A
DK GRN
B
NCA
C2
C
H
YEL
A
NCA
C1
(BUICK)
(CHEVY)
DRIVER
SEAT
FORWARD/
BACK
MOTOR
REAR
HEIGHT
MOTOR
FRONT
HEIGHT
MOTOR
M
ORG
(BUICK) L
(CHEVY) F
PASSENGER SEAT ADJUSTER SWITCH
ENTIRE SEAT
BACK
FOR-
WARD
REAR
HEIGHT
DOWN
ENTIRE
SEAT
FRONT
HEIGHT
FRONT
HEIGHT
UP
ENTIRE
SEAT
REAR
HEIGHT
A
C
BLK
D
D
LT
GRN
A
NCA
E
E
TAN
B
NCA
C3
C
H
LT BLU
A
NCA
C1
G
A
DK BLU
B
NCA
F
B
DK GRN
A
NCA
C2
B
G
YEL
B
NCA
C1
(BUICK)
(CHEVY)
BLK
BLK
G200
(LEFT
KICK
PANEL)
FORWARD/
BACK
MOTOR
REAR
HEIGHT
MOTOR
FRONT
HEIGHT
MOTOR
PASSENGER SEAT
78515

Fig. 39: 6-Way Power Seat Circuit

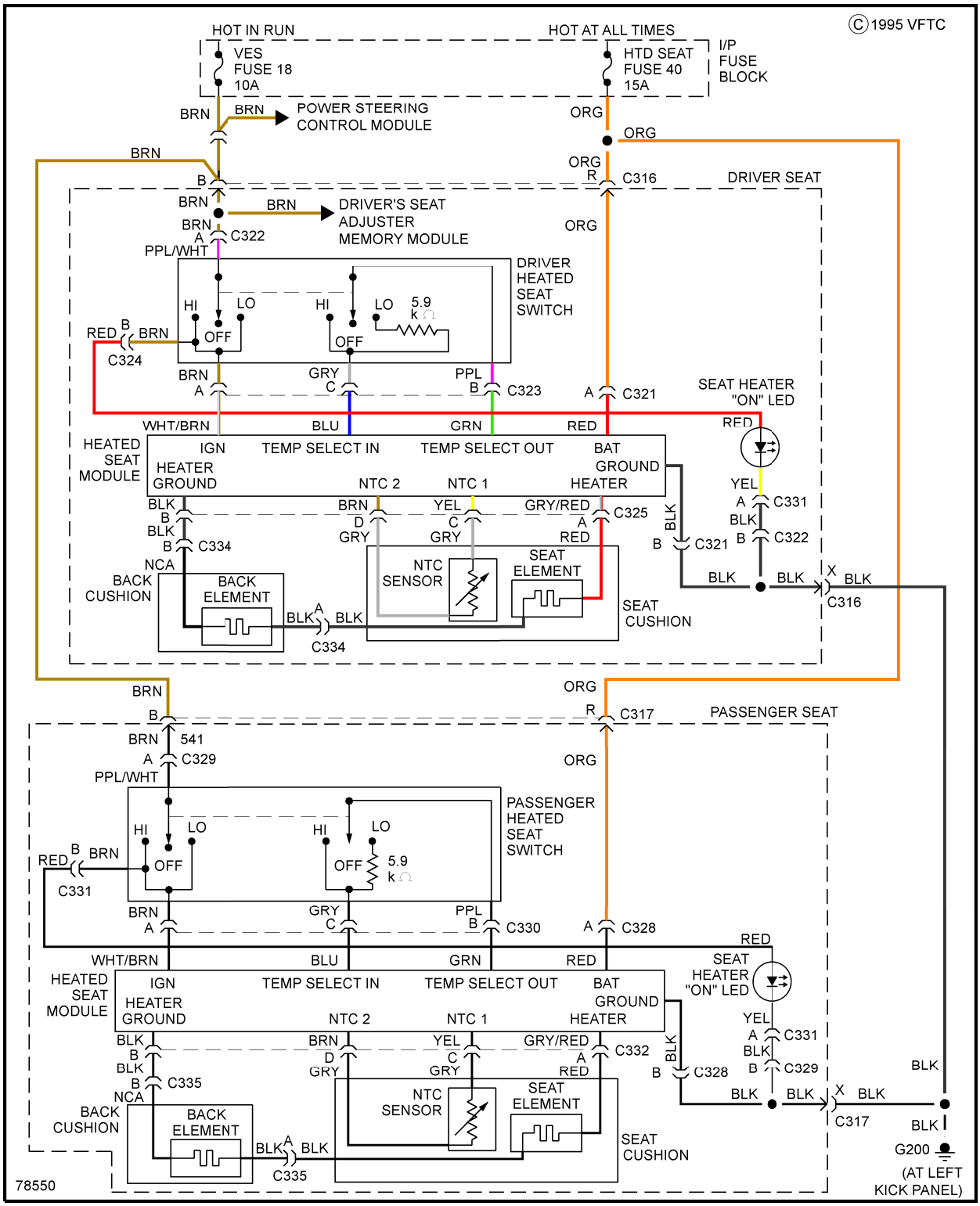
© 1995 VFTC
HOT IN RUN
HOT AT ALL TIMES
VES FUSE 18 10A
HTD SEAT FUSE 40 15A
I/P FUSE BLOCK
BRN
POWER STEERING CONTROL MODULE
ORG
C316
DRIVER SEAT
DRIVER'S SEAT ADJUSTER MEMORY MODULE
C322
PPL/WHT
DRIVER HEATED SEAT SWITCH
HI
LO
OFF
5.9 kΩ
RED
C324
GRY
PPL
C323
C321
SEAT HEATER "ON" LED
WHT/BRN
BLU
GRN
HEATED SEAT MODULE
IGN
TEMP SELECT IN
TEMP SELECT OUT
BAT
HEATER GROUND
NTC 2
NTC 1
GROUND
HEATER
GRY/RED
C325
YEL
C331
C322
C334
NCA
BACK CUSHION
BACK ELEMENT
NTC SENSOR
SEAT ELEMENT
SEAT CUSHION
BLK
C316
PASSENGER SEAT
C317
541
C329
PASSENGER HEATED SEAT SWITCH
C331
C330
C328
C332
C335
C329
C317
G200
(AT LEFT KICK PANEL)
78550

Fig. 40: Heated Seats Circuit

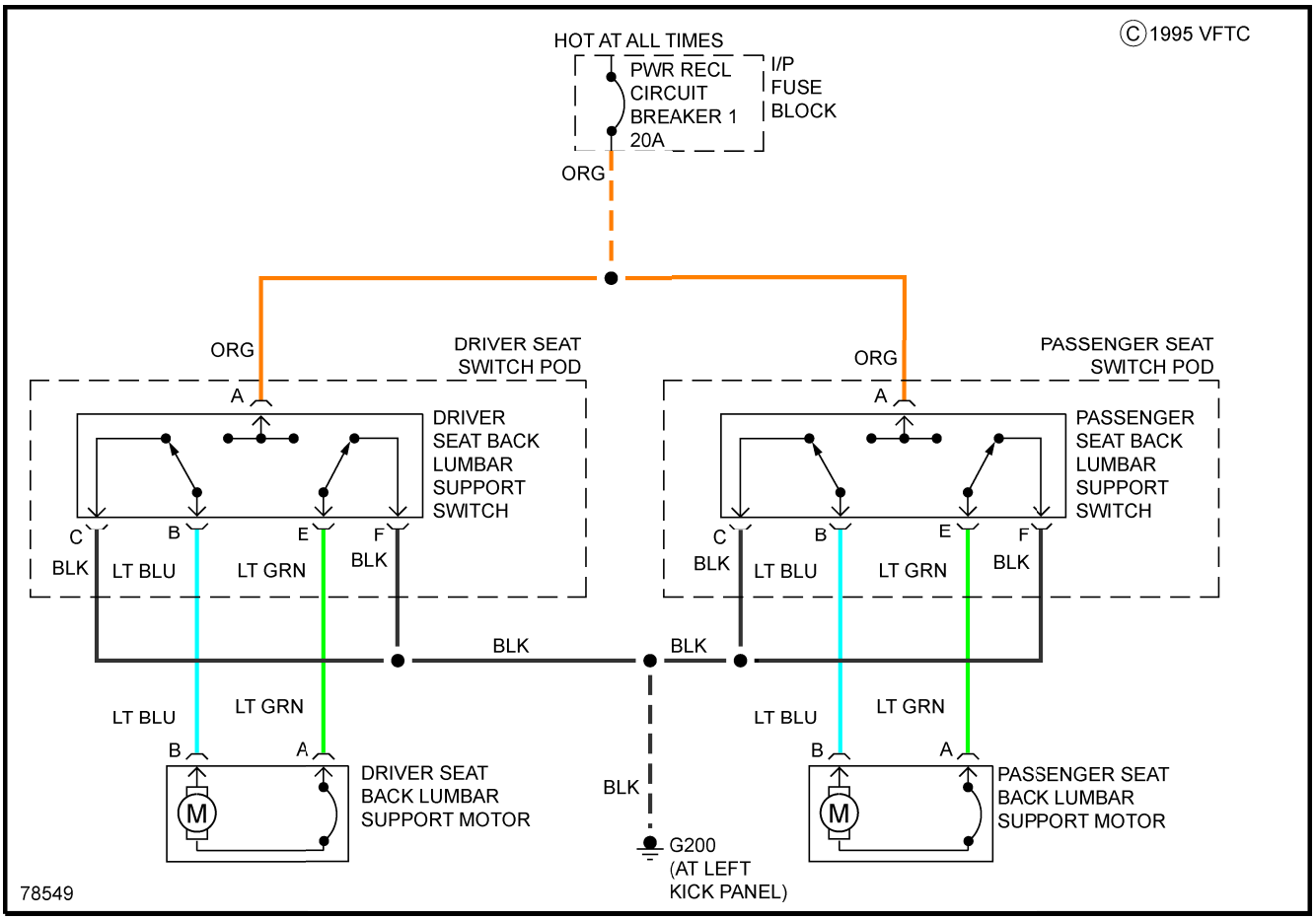
HOT AT ALL TIMES
PWR RECL CIRCUIT BREAKER 1 20A
I/P FUSE BLOCK
ORG
ORG
DRIVER SEAT SWITCH POD
A
DRIVER SEAT BACK LUMBAR SUPPORT SWITCH
C
B
E
F
BLK
LT BLU
LT GRN
BLK
ORG
PASSENGER SEAT SWITCH POD
A
PASSENGER SEAT BACK LUMBAR SUPPORT SWITCH
C
B
E
F
BLK
LT BLU
LT GRN
BLK
BLK
BLK
LT BLU
LT GRN
B
A
M
DRIVER SEAT BACK LUMBAR SUPPORT MOTOR
BLK
G200 (AT LEFT KICK PANEL)
LT BLU
LT GRN
B
A
M
PASSENGER SEAT BACK LUMBAR SUPPORT MOTOR
78549

© 1995 VFTC

Fig. 41: Lumbar Circuit

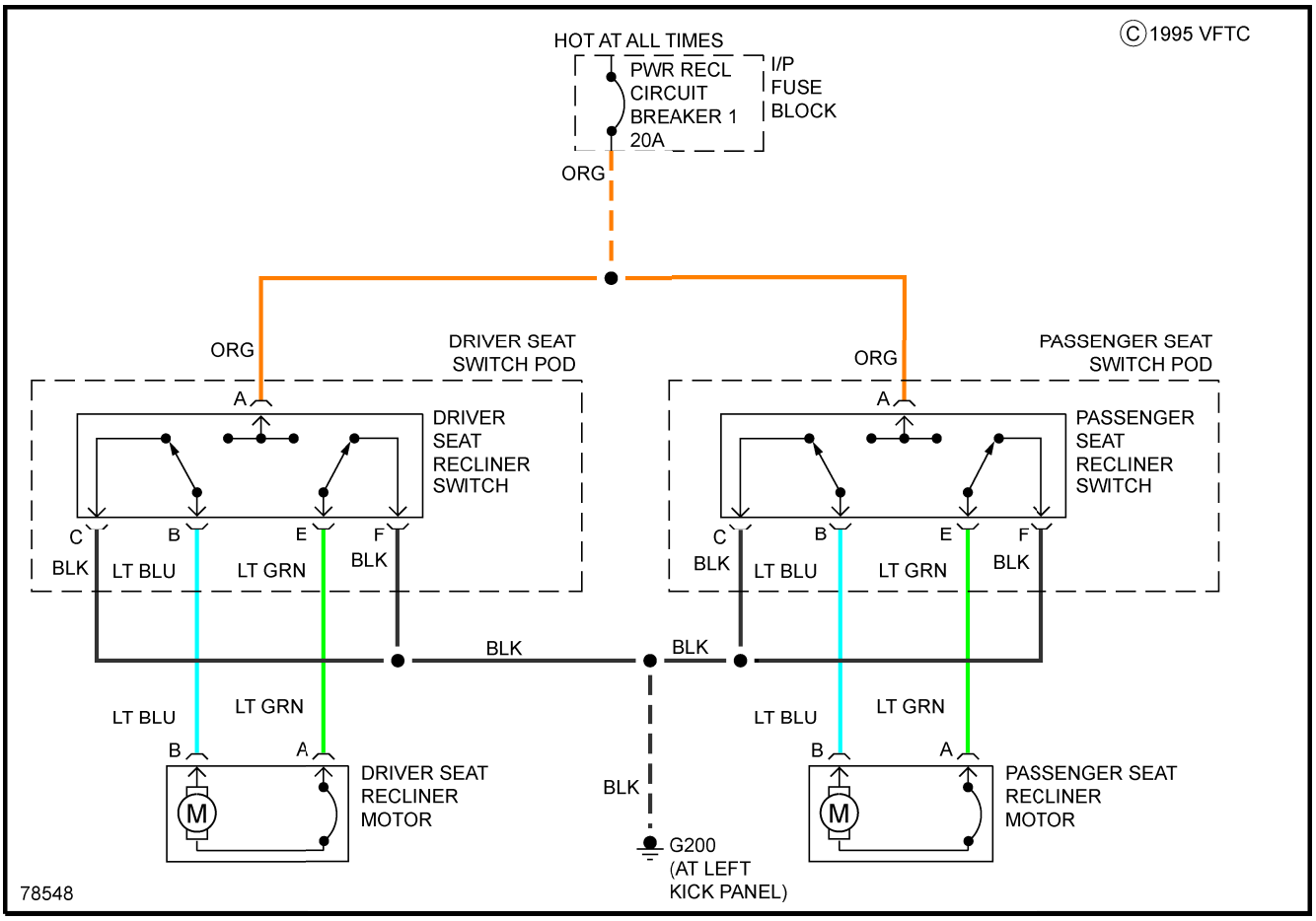
HOT AT ALL TIMES
PWR RECL CIRCUIT BREAKER 1 20A
I/P FUSE BLOCK
ORG
ORG
DRIVER SEAT SWITCH POD
DRIVER SEAT RECLINER SWITCH
A
C
B
E
F
BLK
LT BLU
LT GRN
BLK
ORG
PASSENGER SEAT SWITCH POD
PASSENGER SEAT RECLINER SWITCH
A
C
B
E
F
BLK
LT BLU
LT GRN
BLK
BLK
BLK
LT BLU
LT GRN
B
A
M
DRIVER SEAT RECLINER MOTOR
BLK
G200 (AT LEFT KICK PANEL)
LT BLU
LT GRN
B
A
M
PASSENGER SEAT RECLINER MOTOR
78548

© 1995 VFTC

Fig. 42: Recliner Circuit

POWER WINDOWS

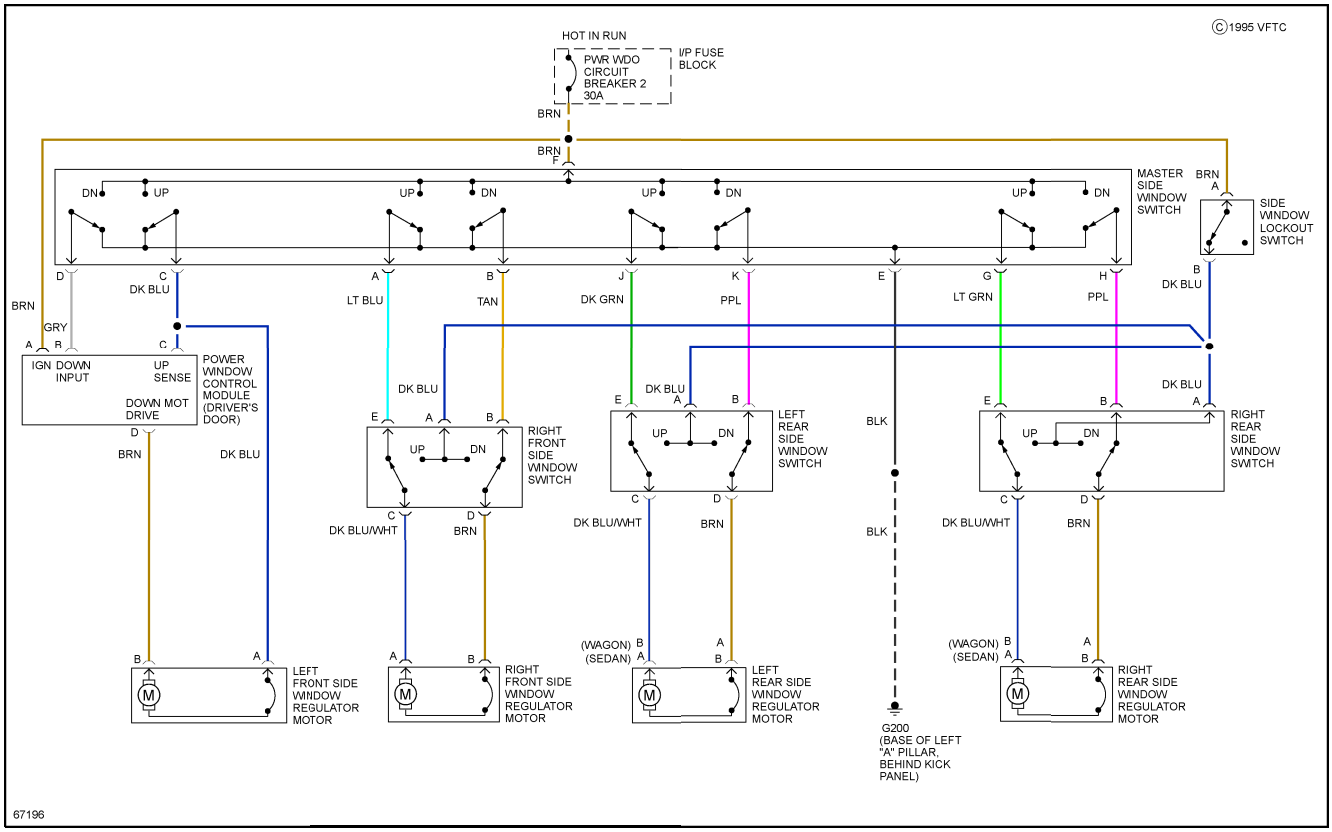
©1995 VFTC
HOT IN RUN
PWR WDO CIRCUIT BREAKER 2 30A
I/P FUSE BLOCK
BRN
MASTER SIDE WINDOW SWITCH
SIDE WINDOW LOCKOUT SWITCH
DN
UP
DK BLU
LT BLU
TAN
DK GRN
PPL
LT GRN
GRY
IGN DOWN INPUT
UP SENSE
DOWN MOT DRIVE
POWER WINDOW CONTROL MODULE (DRIVER'S DOOR)
RIGHT FRONT SIDE WINDOW SWITCH
LEFT REAR SIDE WINDOW SWITCH
RIGHT REAR SIDE WINDOW SWITCH
DK BLU/WHT
BLK
(WAGON)
(SEDAN)
LEFT FRONT SIDE WINDOW REGULATOR MOTOR
RIGHT FRONT SIDE WINDOW REGULATOR MOTOR
LEFT REAR SIDE WINDOW REGULATOR MOTOR
RIGHT REAR SIDE WINDOW REGULATOR MOTOR
G200 (BASE OF LEFT "A" PILLAR, BEHIND KICK PANEL)
67196

Fig. 43: Power Window Circuit

RADIO

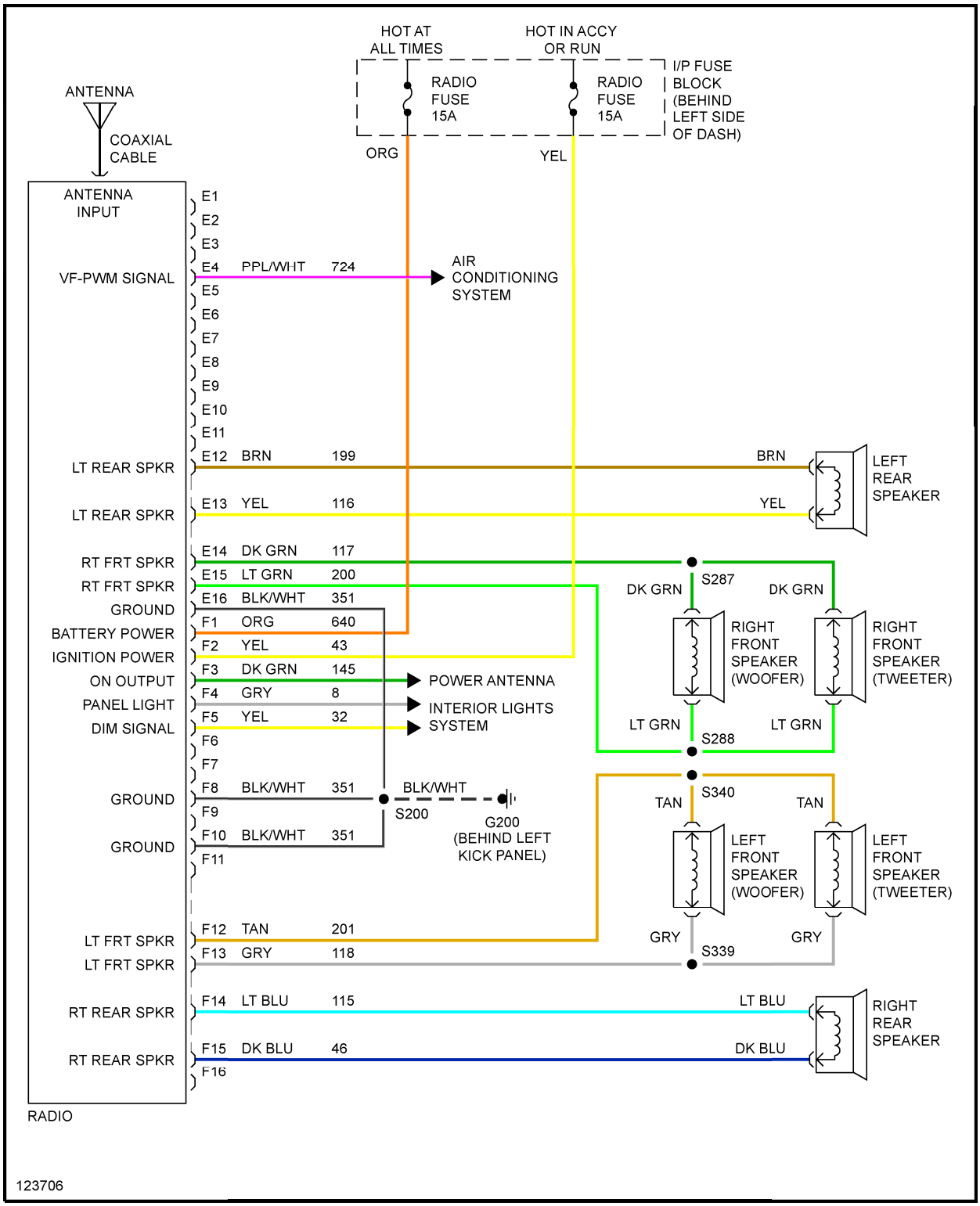
HOT AT ALL TIMES
HOT IN ACCY OR RUN
RADIO FUSE 15A
RADIO FUSE 15A
I/P FUSE BLOCK (BEHIND LEFT SIDE OF DASH)
ORG
YEL
ANTENNA
COAXIAL CABLE
ANTENNA INPUT
VF-PWM SIGNAL
E4 PPL/WHT 724
AIR CONDITIONING SYSTEM
LT REAR SPKR
E12 BRN 199
BRN
LEFT REAR SPEAKER
LT REAR SPKR
E13 YEL 116
YEL
RT FRT SPKR
E14 DK GRN 117
RT FRT SPKR
E15 LT GRN 200
GROUND
E16 BLK/WHT 351
BATTERY POWER
F1 ORG 640
IGNITION POWER
F2 YEL 43
ON OUTPUT
F3 DK GRN 145
POWER ANTENNA
PANEL LIGHT
F4 GRY 8
INTERIOR LIGHTS SYSTEM
DIM SIGNAL
F5 YEL 32
DK GRN
S287
DK GRN
RIGHT FRONT SPEAKER (WOOFER)
RIGHT FRONT SPEAKER (TWEETER)
LT GRN
S288
LT GRN
GROUND
F8 BLK/WHT 351
BLK/WHT
S200
G200 (BEHIND LEFT KICK PANEL)
GROUND
F10 BLK/WHT 351
TAN
S340
TAN
LEFT FRONT SPEAKER (WOOFER)
LEFT FRONT SPEAKER (TWEETER)
LT FRT SPKR
F12 TAN 201
LT FRT SPKR
F13 GRY 118
GRY
S339
GRY
RT REAR SPKR
F14 LT BLU 115
LT BLU
RIGHT REAR SPEAKER
RT REAR SPKR
F15 DK BLU 46
DK BLU
RADIO
123706

Fig. 44: Radio Circuits

SHIFT INTERLOCKS

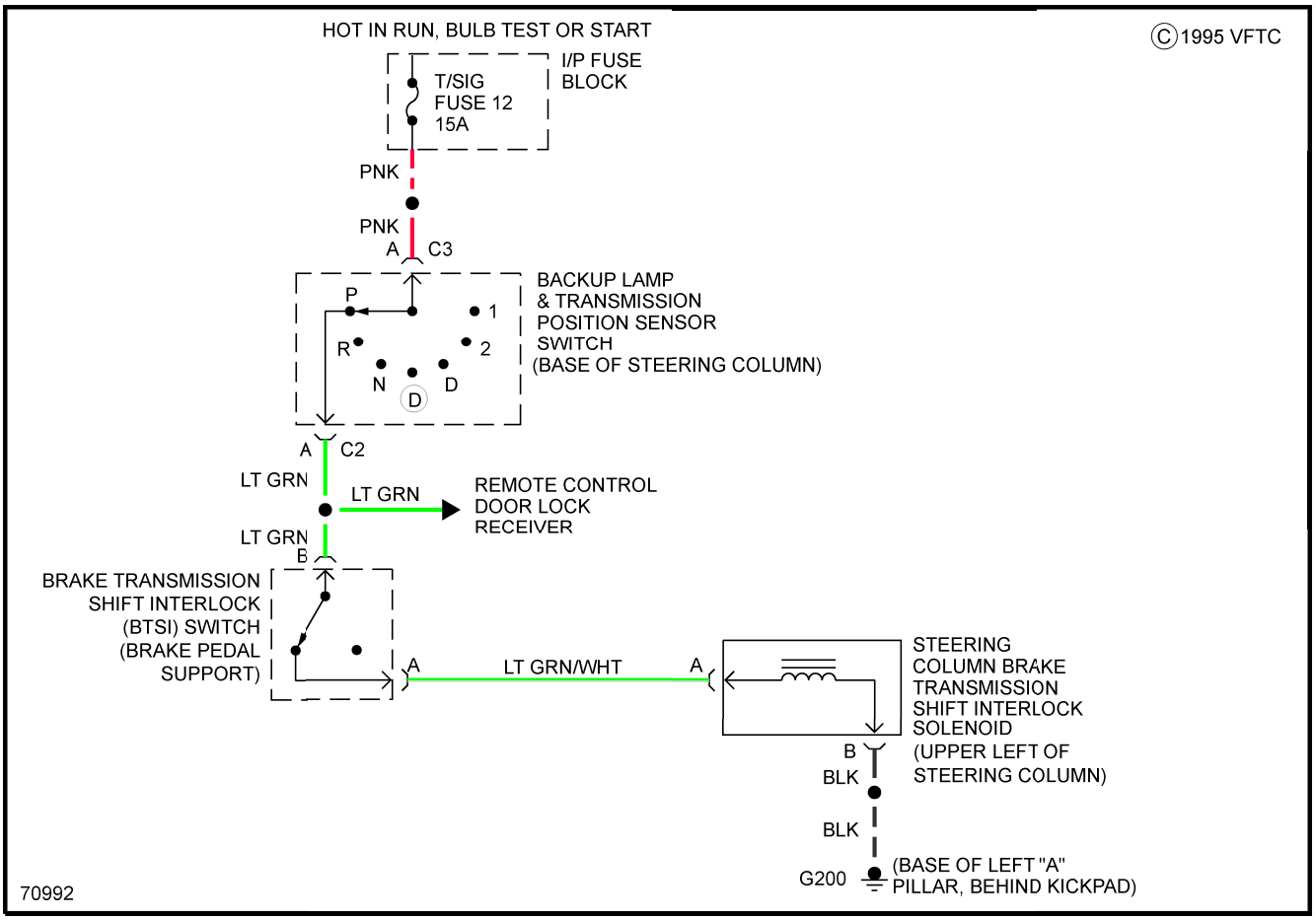
HOT IN RUN, BULB TEST OR START
©1995 VFTC
T/SIG
FUSE 12
15A
I/P FUSE
BLOCK
PNK
PNK
A
C3
BACKUP LAMP
& TRANSMISSION
POSITION SENSOR
SWITCH
(BASE OF STEERING COLUMN)
P
1
R
2
N
D
D
A
C2
LT GRN
LT GRN
REMOTE CONTROL
DOOR LOCK
RECEIVER
LT GRN
B
BRAKE TRANSMISSION
SHIFT INTERLOCK
(BTSI) SWITCH
(BRAKE PEDAL
SUPPORT)
A
LT GRN/WHT
A
STEERING
COLUMN BRAKE
TRANSMISSION
SHIFT INTERLOCK
SOLENOID
(UPPER LEFT OF
STEERING COLUMN)
B
BLK
BLK
G200
(BASE OF LEFT "A"
PILLAR, BEHIND KICKPAD)
70992

Fig. 45: Shift Interlock Circuit

STARTING/CHARGING

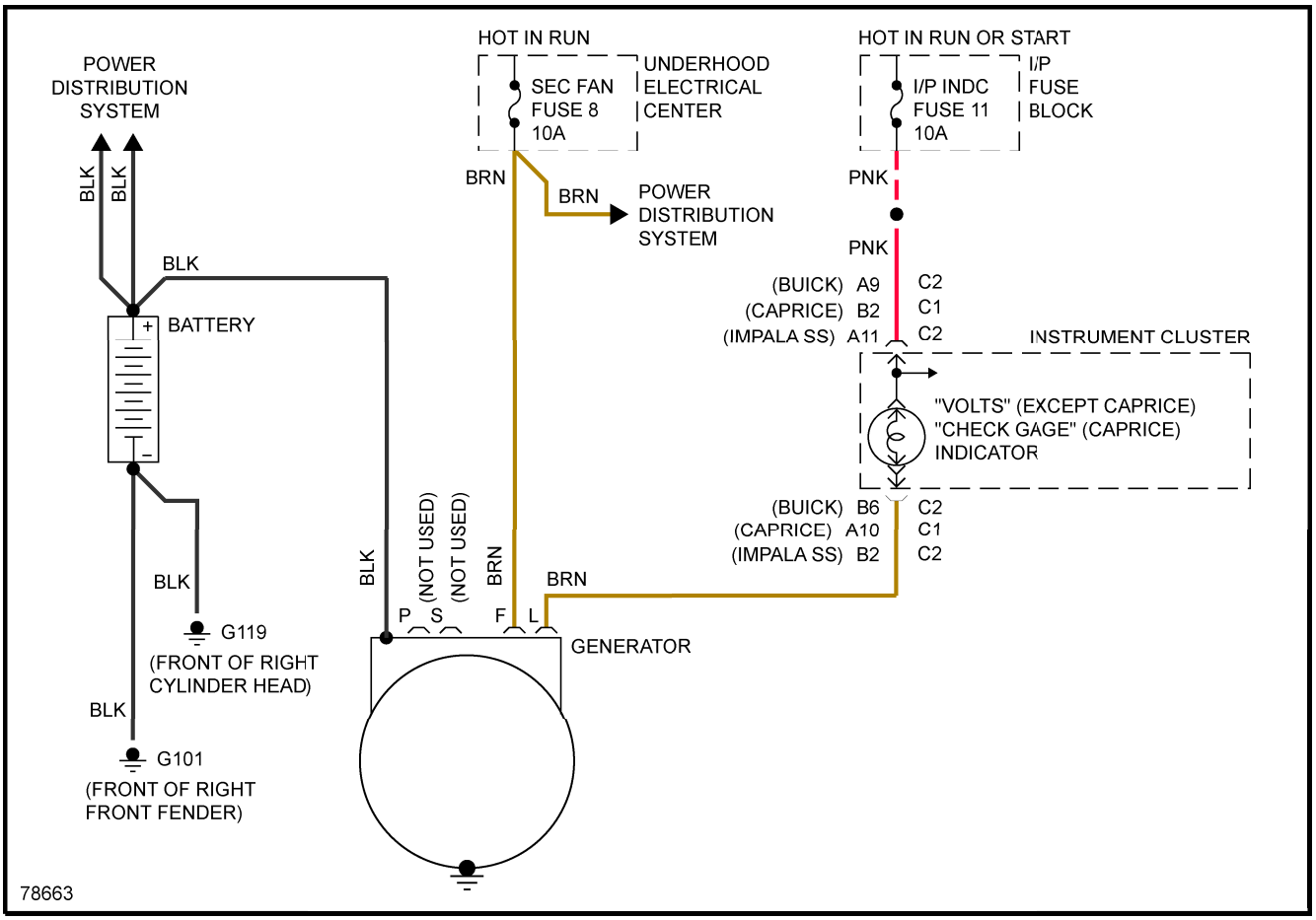
POWER DISTRIBUTION SYSTEM
BLK
BLK
BLK
BATTERY
+
-
BLK
G119
(FRONT OF RIGHT CYLINDER HEAD)
BLK
G101
(FRONT OF RIGHT FRONT FENDER)
HOT IN RUN
SEC FAN FUSE 8 10A
UNDERHOOD ELECTRICAL CENTER
BRN
BRN
POWER DISTRIBUTION SYSTEM
HOT IN RUN OR START
I/P INDC FUSE 11 10A
I/P FUSE BLOCK
PNK
PNK
(BUICK) A9 C2
(CAPRICE) B2 C1
(IMPALA SS) A11 C2
INSTRUMENT CLUSTER
"VOLTS" (EXCEPT CAPRICE)
"CHECK GAGE" (CAPRICE)
INDICATOR
(BUICK) B6 C2
(CAPRICE) A10 C1
(IMPALA SS) B2 C2
BLK
(NOT USED)
(NOT USED)
BRN
BRN
P
S
F
L
GENERATOR
78663

Fig. 46: Charging Circuit

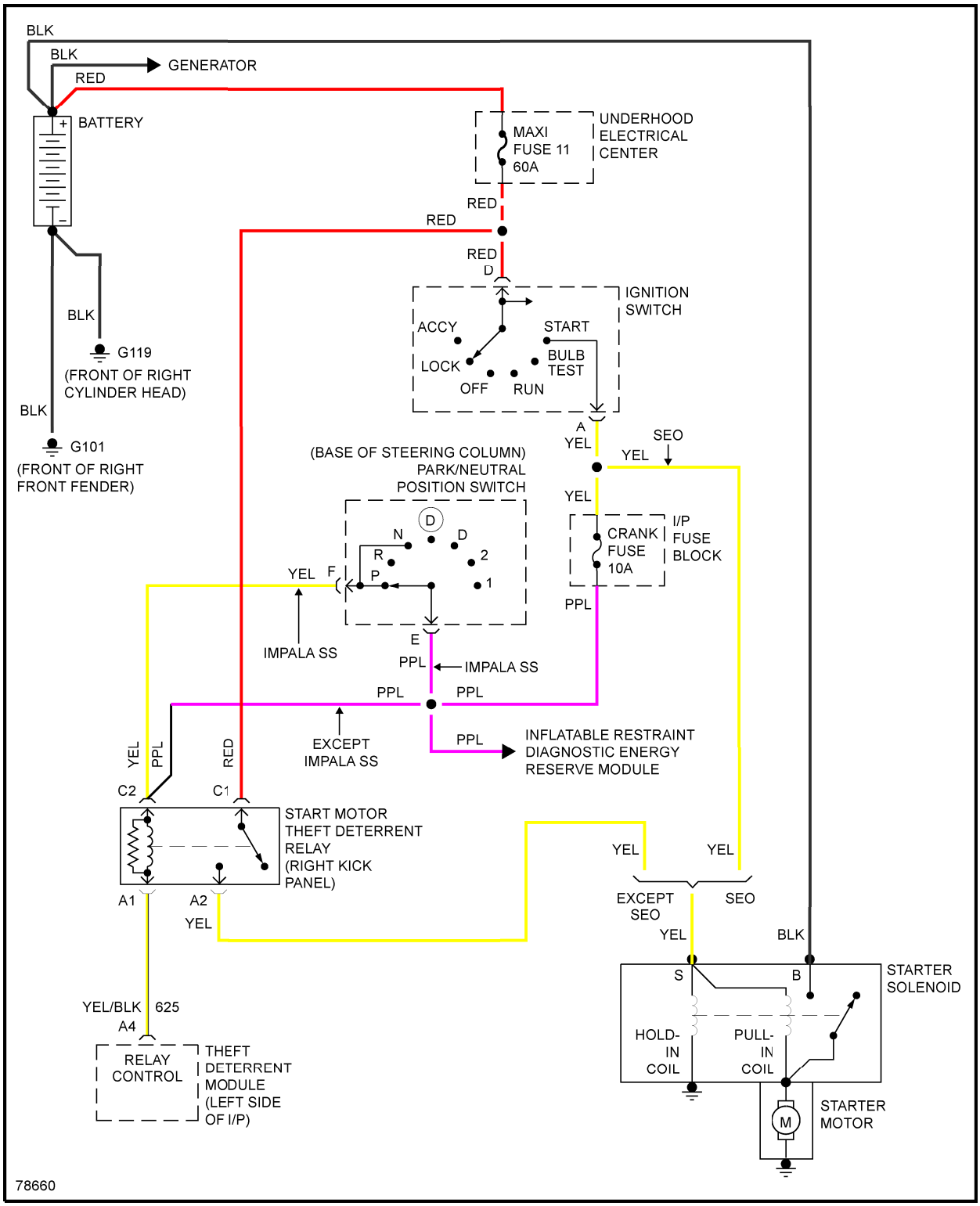
BLK
BLK
GENERATOR
RED
BATTERY
+
–
MAXI
FUSE 11
60A
UNDERHOOD
ELECTRICAL
CENTER
RED
RED
RED
D
IGNITION
SWITCH
ACCY
START
LOCK
BULB
TEST
OFF
RUN
BLK
G119
(FRONT OF RIGHT
CYLINDER HEAD)
BLK
G101
(FRONT OF RIGHT
FRONT FENDER)
A
YEL
SEO
YEL
(BASE OF STEERING COLUMN)
PARK/NEUTRAL
POSITION SWITCH
YEL
D
N
D
R
2
P
1
YEL
F
CRANK
FUSE
10A
I/P
FUSE
BLOCK
PPL
E
IMPALA SS
PPL
IMPALA SS
PPL
PPL
EXCEPT
IMPALA SS
PPL
INFLATABLE RESTRAINT
DIAGNOSTIC ENERGY
RESERVE MODULE
YEL
PPL
RED
C2
C1
START MOTOR
THEFT DETERRENT
RELAY
(RIGHT KICK
PANEL)
A1
A2
YEL
YEL
YEL
EXCEPT
SEO
SEO
YEL
BLK
S
B
STARTER
SOLENOID
YEL/BLK
625
A4
HOLD-
IN
COIL
PULL-
IN
COIL
RELAY
CONTROL
THEFT
DETERRENT
MODULE
(LEFT SIDE
OF I/P)
M
STARTER
MOTOR
78660

Fig. 47: Starting Circuit

SUPPLEMENTAL RESTRAINTS

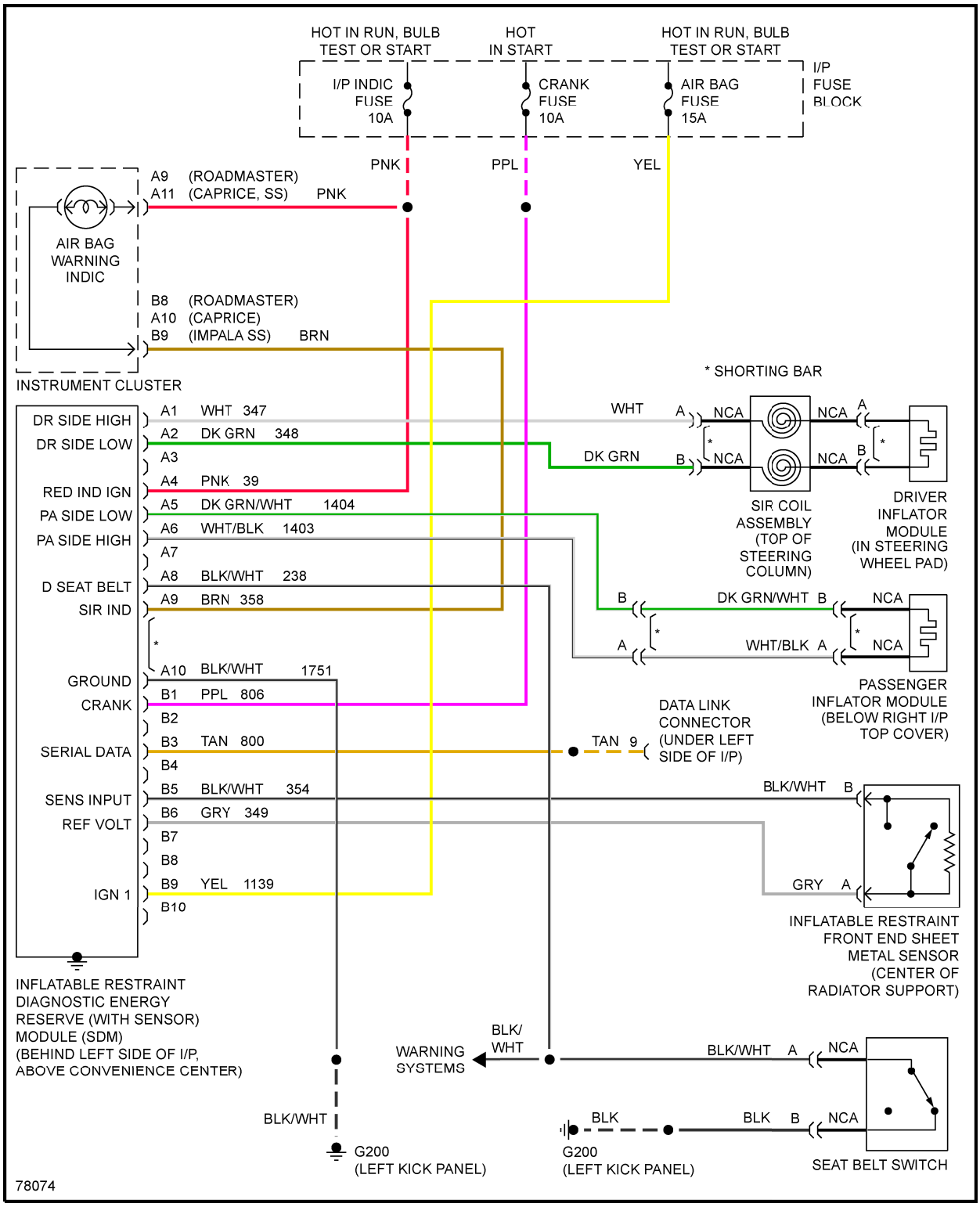
HOT IN RUN, BULB TEST OR START
HOT IN START
HOT IN RUN, BULB TEST OR START
I/P INDIC FUSE 10A
CRANK FUSE 10A
AIR BAG FUSE 15A
I/P FUSE BLOCK
PNK
PPL
YEL
A9 (ROADMASTER)
A11 (CAPRICE, SS) PNK
AIR BAG WARNING INDIC
B8 (ROADMASTER)
A10 (CAPRICE)
B9 (IMPALA SS) BRN
INSTRUMENT CLUSTER
* SHORTING BAR
DR SIDE HIGH
DR SIDE LOW
RED IND IGN
PA SIDE LOW
PA SIDE HIGH
D SEAT BELT
SIR IND
GROUND
CRANK
SERIAL DATA
SENS INPUT
REF VOLT
IGN 1
A1 WHT 347
A2 DK GRN 348
A3
A4 PNK 39
A5 DK GRN/WHT 1404
A6 WHT/BLK 1403
A7
A8 BLK/WHT 238
A9 BRN 358
A10 BLK/WHT 1751
B1 PPL 806
B2
B3 TAN 800
B4
B5 BLK/WHT 354
B6 GRY 349
B7
B8
B9 YEL 1139
B10
WHT
DK GRN
NCA
SIR COIL ASSEMBLY (TOP OF STEERING COLUMN)
DRIVER INFLATOR MODULE (IN STEERING WHEEL PAD)
DK GRN/WHT
WHT/BLK
PASSENGER INFLATOR MODULE (BELOW RIGHT I/P TOP COVER)
DATA LINK CONNECTOR (UNDER LEFT SIDE OF I/P)
TAN 9
BLK/WHT
GRY
INFLATABLE RESTRAINT FRONT END SHEET METAL SENSOR (CENTER OF RADIATOR SUPPORT)
INFLATABLE RESTRAINT DIAGNOSTIC ENERGY RESERVE (WITH SENSOR) MODULE (SDM) (BEHIND LEFT SIDE OF I/P, ABOVE CONVENIENCE CENTER)
WARNING SYSTEMS
BLK/WHT
BLK
G200 (LEFT KICK PANEL)
SEAT BELT SWITCH
78074

Fig. 48: Supplemental Restraint Circuit

TRANSMISSION

5.7L

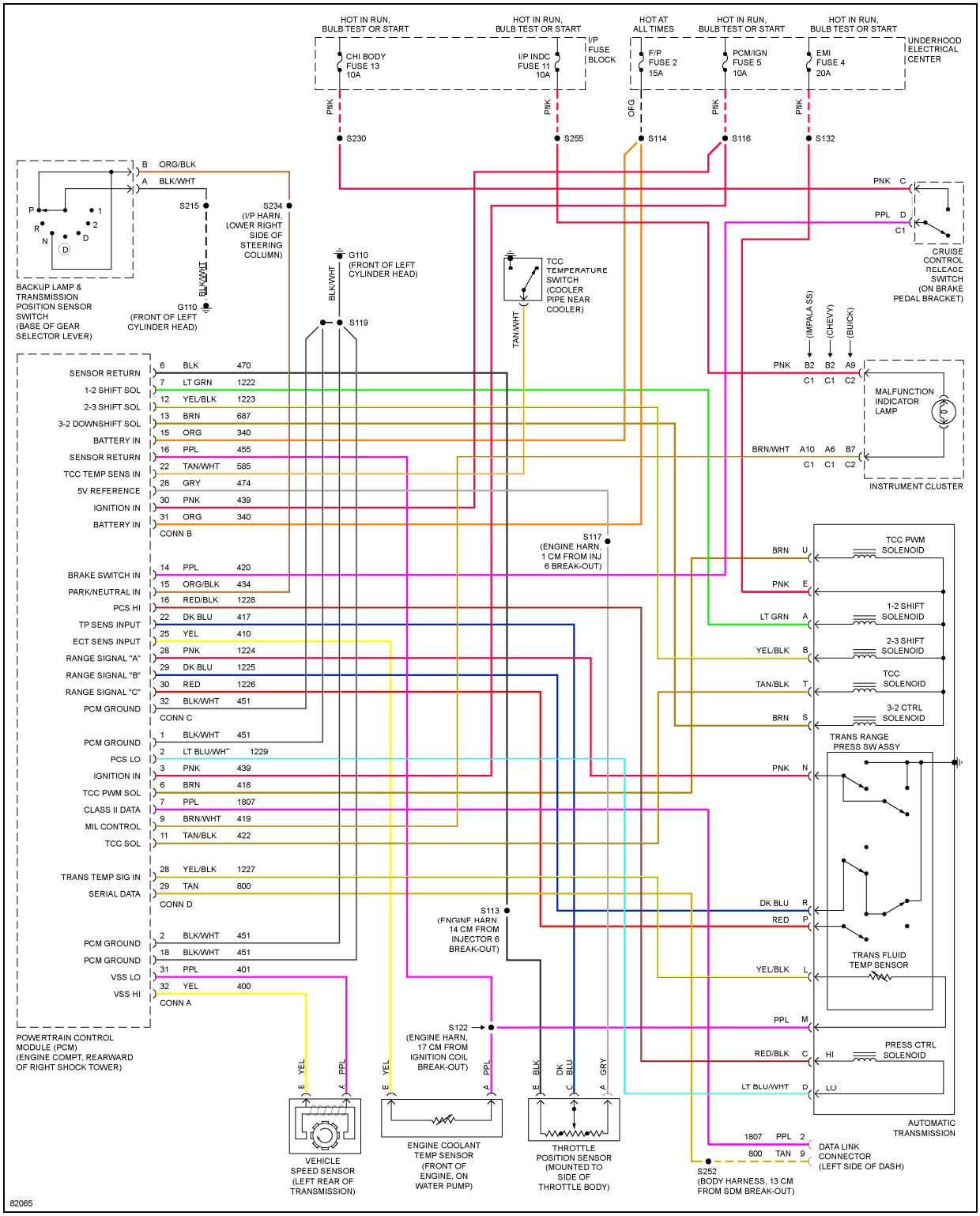
HOT IN RUN, BULB TEST OR START
CHI BODY FUSE 13 10A
HOT IN RUN, BULB TEST OR START
I/P INDC FUSE 11 10A
I/P FUSE BLOCK
HOT AT ALL TIMES
F/P FUSE 2 15A
HOT IN RUN, BULB TEST OR START
PCM/IGN FUSE 5 10A
HOT IN RUN, BULB TEST OR START
EMI FUSE 4 20A
UNDERHOOD ELECTRICAL CENTER
PNK
PNK
ORG
PNK
PNK
S230
S255
S114
S116
S132
B ORG/BLK
A BLK/WHT
S215
S234 (I/P HARN, LOWER RIGHT SIDE OF STEERING COLUMN)
BACKUP LAMP & TRANSMISSION POSITION SENSOR SWITCH (BASE OF GEAR SELECTOR LEVER)
G110 (FRONT OF LEFT CYLINDER HEAD)
BLK/WHT
G110 (FRONT OF LEFT CYLINDER HEAD)
BLK/WHT
S119
TCC TEMPERATURE SWITCH (COOLER PIPE NEAR COOLER)
TAN/WHT
PNK C
PPL D
C1
CRUISE CONTROL RELEASE SWITCH (ON BRAKE PEDAL BRACKET)
(IMPALA SS)
(CHEVY)
(BUICK)
PNK B2 B2 A9
C1 C1 C2
MALFUNCTION INDICATOR LAMP
BRN/WHT A10 A6 B7
C1 C1 C2
INSTRUMENT CLUSTER
SENSOR RETURN 6 BLK 470
1-2 SHIFT SOL 7 LT GRN 1222
2-3 SHIFT SOL 12 YEL/BLK 1223
3-2 DOWNSHIFT SOL 13 BRN 687
BATTERY IN 15 ORG 340
SENSOR RETURN 16 PPL 455
TCC TEMP SENS IN 22 TAN/WHT 585
5V REFERENCE 28 GRY 474
IGNITION IN 30 PNK 439
BATTERY IN 31 ORG 340
CONN B
BRAKE SWITCH IN 14 PPL 420
PARK/NEUTRAL IN 15 ORG/BLK 434
PCS HI 16 RED/BLK 1228
TP SENS INPUT 22 DK BLU 417
ECT SENS INPUT 25 YEL 410
RANGE SIGNAL "A" 28 PNK 1224
RANGE SIGNAL "B" 29 DK BLU 1225
RANGE SIGNAL "C" 30 RED 1226
PCM GROUND 32 BLK/WHT 451
CONN C
PCM GROUND 1 BLK/WHT 451
PCS LO 2 LT BLU/WHT 1229
IGNITION IN 3 PNK 439
TCC PWM SOL 6 BRN 418
CLASS II DATA 7 PPL 1807
MIL CONTROL 9 BRN/WHT 419
TCC SOL 11 TAN/BLK 422
TRANS TEMP SIG IN 28 YEL/BLK 1227
SERIAL DATA 29 TAN 800
CONN D
PCM GROUND 2 BLK/WHT 451
PCM GROUND 18 BLK/WHT 451
VSS LO 31 PPL 401
VSS HI 32 YEL 400
CONN A
POWERTRAIN CONTROL MODULE (PCM) (ENGINE COMPT, REARWARD OF RIGHT SHOCK TOWER)
S117 (ENGINE HARN, 1 CM FROM INJ 6 BREAK-OUT)
BRN U
TCC PWM SOLENOID
PNK E
LT GRN A
1-2 SHIFT SOLENOID
YEL/BLK B
2-3 SHIFT SOLENOID
TAN/BLK T
TCC SOLENOID
BRN S
3-2 CTRL SOLENOID
TRANS RANGE PRESS SW ASSY
PNK N
DK BLU R
RED P
TRANS FLUID TEMP SENSOR
YEL/BLK L
PPL M
RED/BLK C
HI
PRESS CTRL SOLENOID
LT BLU/WHT D
LO
AUTOMATIC TRANSMISSION
S113 (ENGINE HARN, 14 CM FROM INJECTOR 6 BREAK-OUT)
S122 (ENGINE HARN, 17 CM FROM IGNITION COIL BREAK-OUT)
YEL
PPL
YEL
PPL
BLK
DK BLU
GRY
VEHICLE SPEED SENSOR (LEFT REAR OF TRANSMISSION)
ENGINE COOLANT TEMP SENSOR (FRONT OF ENGINE, ON WATER PUMP)
THROTTLE POSITION SENSOR (MOUNTED TO SIDE OF THROTTLE BODY)
1807 PPL 2
800 TAN 9
DATA LINK CONNECTOR (LEFT SIDE OF DASH)
S252 (BODY HARNESS, 13 CM FROM SDM BREAK-OUT)
82065

Fig. 49: 5.7L (VIN P), Transmission Circuit

TRUNK, TAILGATE, FUEL DOOR

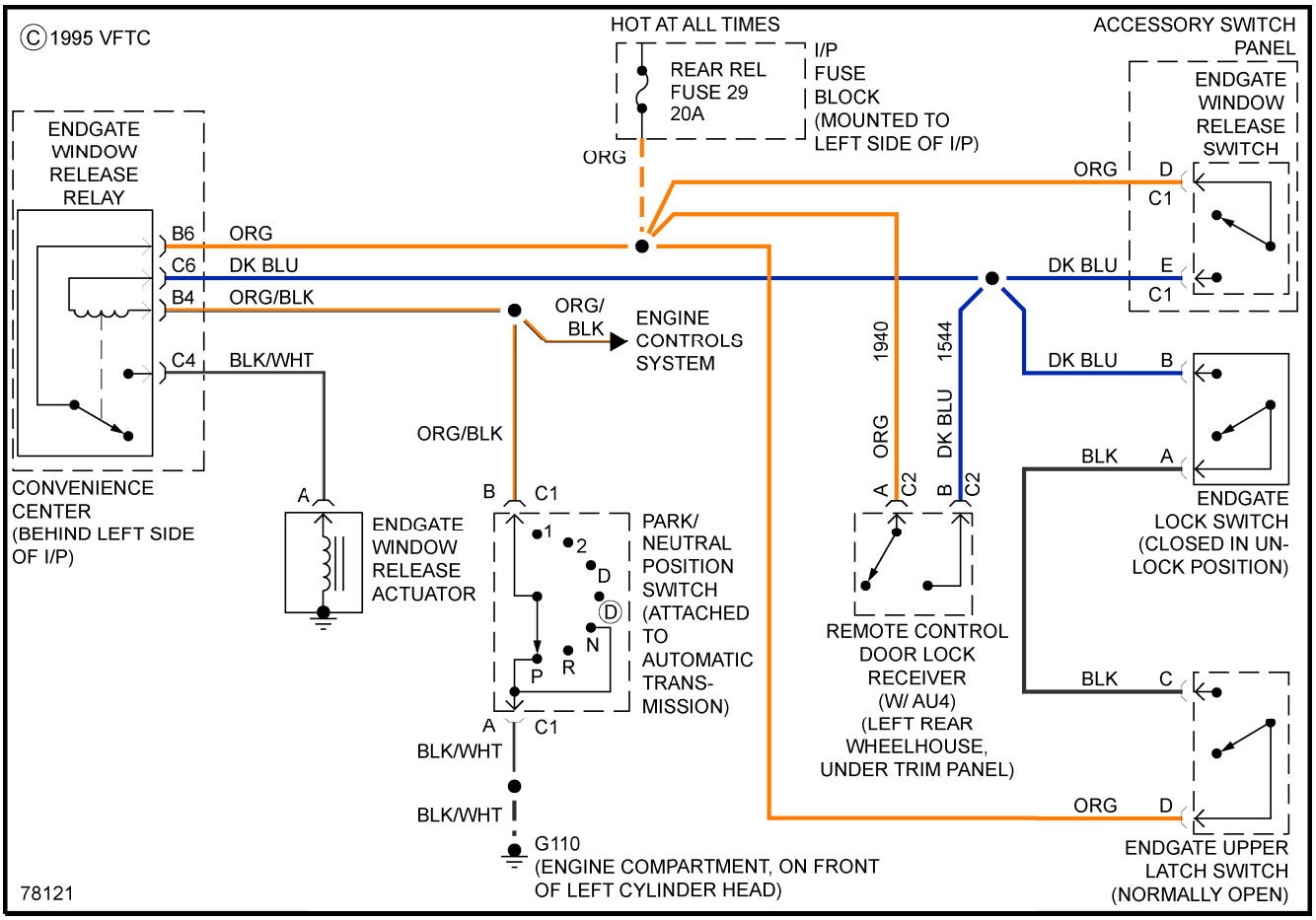
©1995 VFTC
HOT AT ALL TIMES
REAR REL FUSE 29 20A
I/P FUSE BLOCK (MOUNTED TO LEFT SIDE OF I/P)
ACCESSORY SWITCH PANEL
ENDGATE WINDOW RELEASE SWITCH
ENDGATE WINDOW RELEASE RELAY
ORG
B6
C6
B4
C4
DK BLU
ORG/BLK
BLK/WHT
ORG/ BLK
ENGINE CONTROLS SYSTEM
D
C1
E
B
A
BLK
C
1940
1544
C2
CONVENIENCE CENTER (BEHIND LEFT SIDE OF I/P)
ENDGATE WINDOW RELEASE ACTUATOR
PARK/ NEUTRAL POSITION SWITCH (ATTACHED TO AUTOMATIC TRANS-MISSION)
1
2
N
R
P
REMOTE CONTROL DOOR LOCK RECEIVER (W/ AU4) (LEFT REAR WHEELHOUSE, UNDER TRIM PANEL)
ENDGATE LOCK SWITCH (CLOSED IN UN-LOCK POSITION)
ENDGATE UPPER LATCH SWITCH (NORMALLY OPEN)
G110 (ENGINE COMPARTMENT, ON FRONT OF LEFT CYLINDER HEAD)
78121

Fig. 50: Tailgate Release Circuit

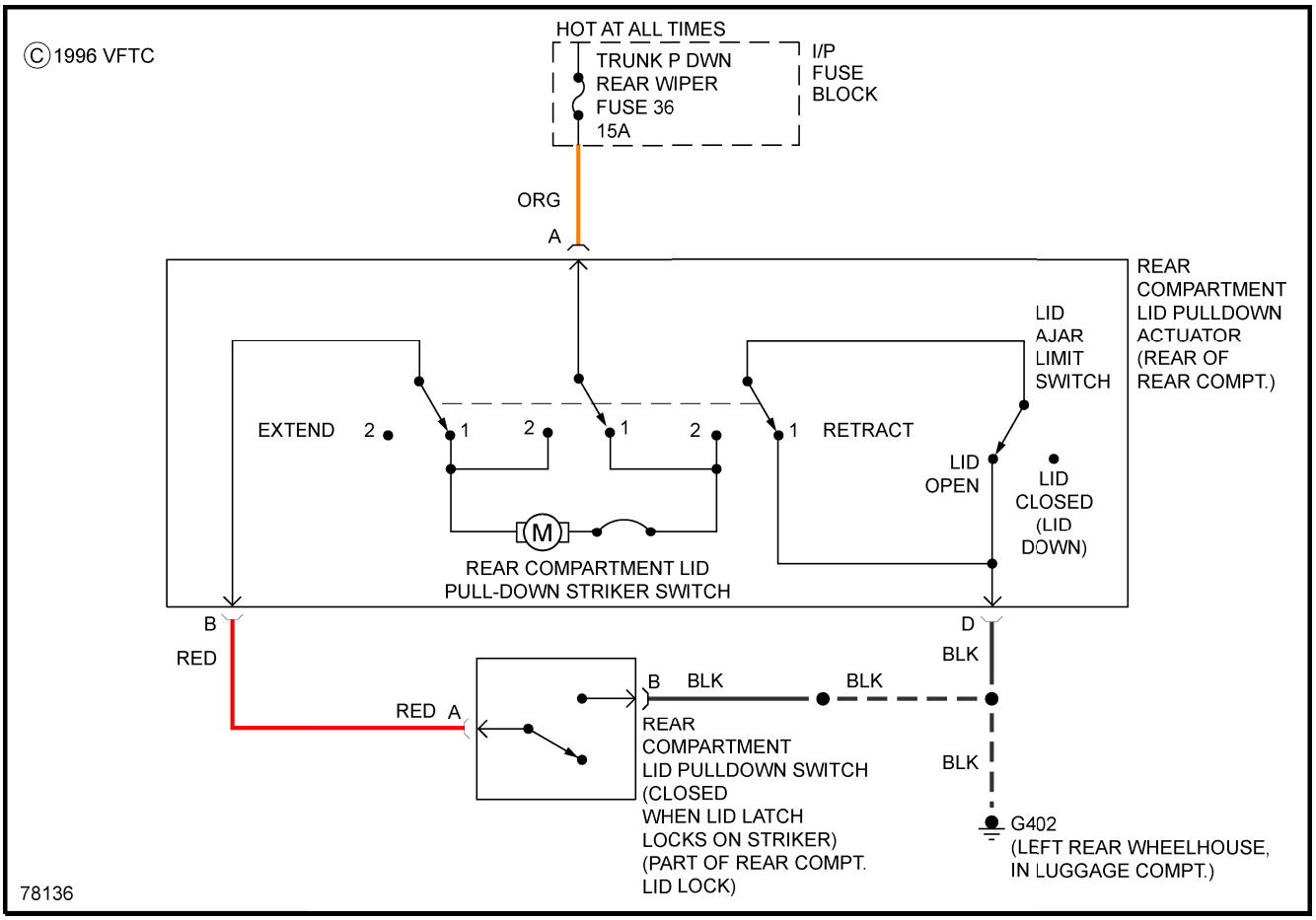
©1996 VFTC
HOT AT ALL TIMES
TRUNK P DWN
REAR WIPER
FUSE 36
15A
I/P
FUSE
BLOCK
ORG
A
REAR
COMPARTMENT
LID PULLDOWN
ACTUATOR
(REAR OF
REAR COMPT.)
LID
AJAR
LIMIT
SWITCH
EXTEND
2
1
2
1
2
1
RETRACT
LID
OPEN
LID
CLOSED
(LID
DOWN)
M
REAR COMPARTMENT LID
PULL-DOWN STRIKER SWITCH
B
RED
D
BLK
B
BLK
BLK
RED
A
REAR
COMPARTMENT
LID PULLDOWN SWITCH
(CLOSED
WHEN LID LATCH
LOCKS ON STRIKER)
(PART OF REAR COMPT.
LID LOCK)
BLK
G402
(LEFT REAR WHEELHOUSE,
IN LUGGAGE COMPT.)
78136

Fig. 51: Trunk Pull-Down Circuit

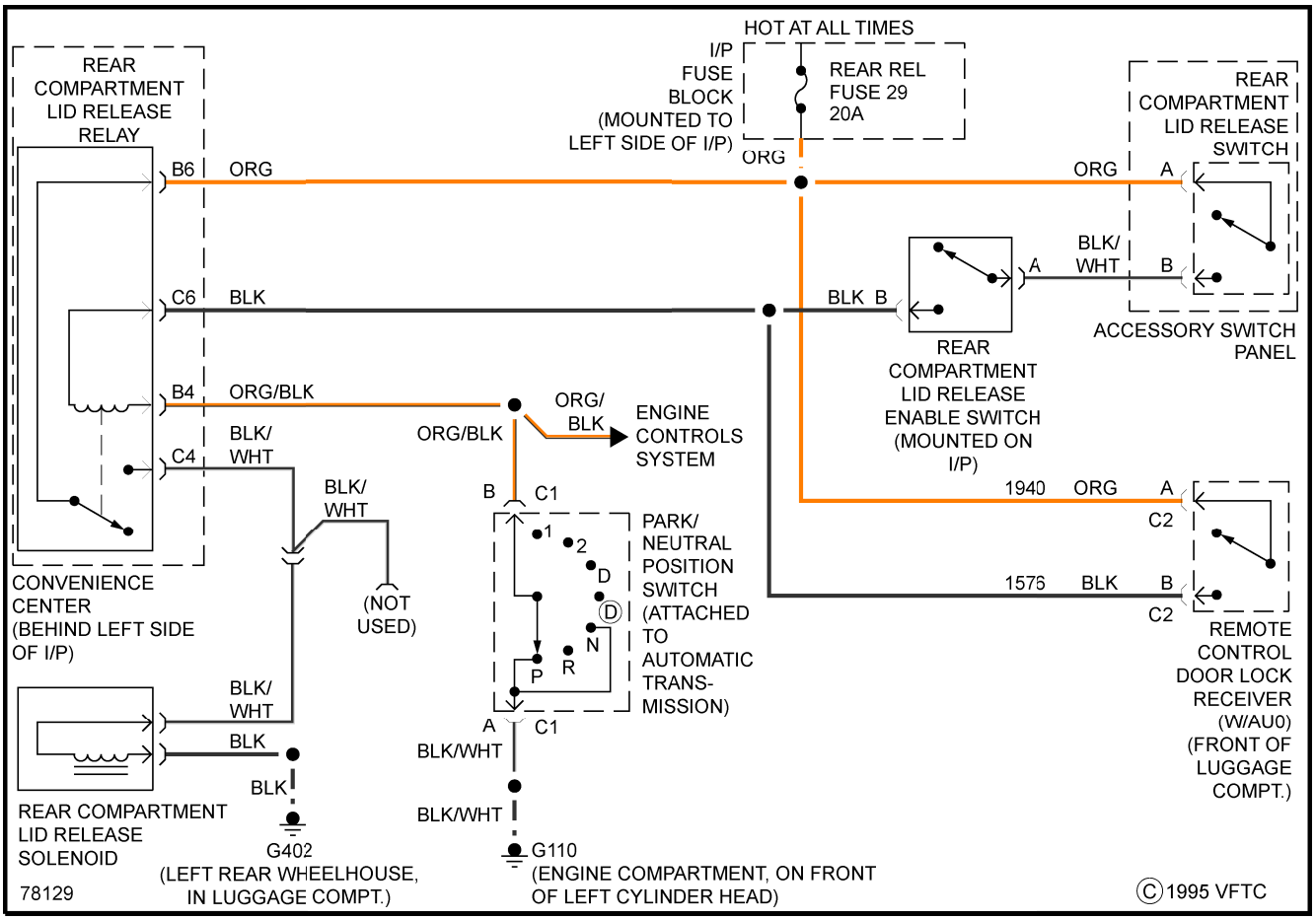
HOT AT ALL TIMES
I/P FUSE BLOCK (MOUNTED TO LEFT SIDE OF I/P)
REAR REL FUSE 29 20A
REAR COMPARTMENT LID RELEASE RELAY
B6
ORG
C6
BLK
B4
ORG/BLK
C4
BLK/ WHT
CONVENIENCE CENTER (BEHIND LEFT SIDE OF I/P)
ORG/BLK
ORG/ BLK
ENGINE CONTROLS SYSTEM
BLK/ WHT
(NOT USED)
B
C1
PARK/ NEUTRAL POSITION SWITCH (ATTACHED TO AUTOMATIC TRANS-MISSION)
1
2
D
N
R
P
A
C1
BLK/WHT
BLK
REAR COMPARTMENT LID RELEASE SOLENOID
BLK/WHT
BLK
G402
(LEFT REAR WHEELHOUSE, IN LUGGAGE COMPT.)
BLK/WHT
G110
(ENGINE COMPARTMENT, ON FRONT OF LEFT CYLINDER HEAD)
78129
ORG
BLK B
REAR COMPARTMENT LID RELEASE ENABLE SWITCH (MOUNTED ON I/P)
A
BLK/ WHT
REAR COMPARTMENT LID RELEASE SWITCH
ORG
A
B
ACCESSORY SWITCH PANEL
1940
ORG
A
C2
1576
BLK
B
C2
REMOTE CONTROL DOOR LOCK RECEIVER (W/AU0) (FRONT OF LUGGAGE COMPT.)
©1995 VFTC

Fig. 52: Trunk Release Circuit

WARNING SYSTEMS

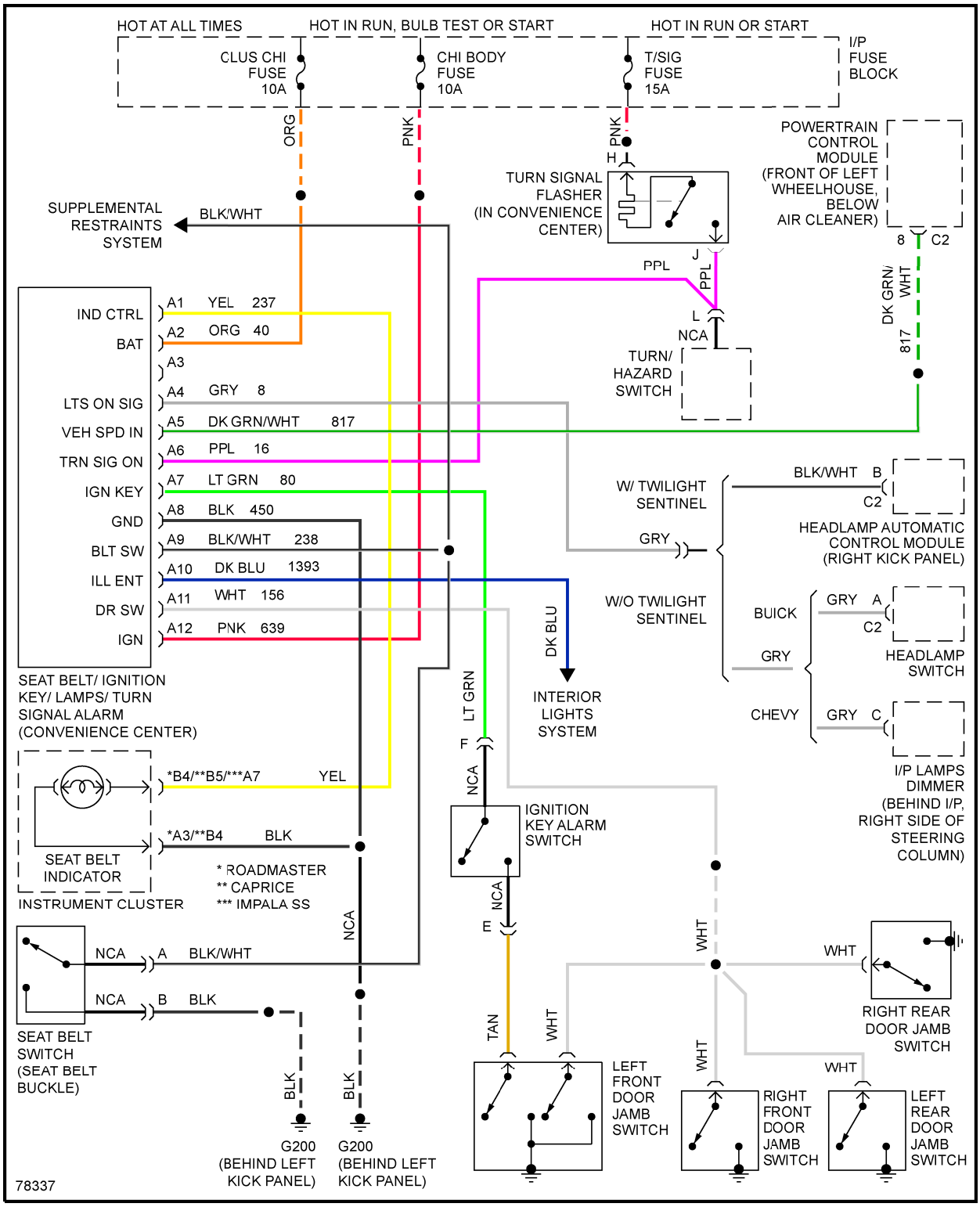
HOT AT ALL TIMES
HOT IN RUN, BULB TEST OR START
HOT IN RUN OR START
CLUS CHI FUSE 10A
CHI BODY FUSE 10A
T/SIG FUSE 15A
I/P FUSE BLOCK
ORG
PNK
PNK
H
TURN SIGNAL FLASHER (IN CONVENIENCE CENTER)
POWERTRAIN CONTROL MODULE (FRONT OF LEFT WHEELHOUSE, BELOW AIR CLEANER)
8
C2
SUPPLEMENTAL RESTRAINTS SYSTEM
BLK/WHT
J
PPL
PPL
L
NCA
TURN/ HAZARD SWITCH
DK GRN/ WHT
817
IND CTRL
BAT
LTS ON SIG
VEH SPD IN
TRN SIG ON
IGN KEY
GND
BLT SW
ILL ENT
DR SW
IGN
A1 YEL 237
A2 ORG 40
A3
A4 GRY 8
A5 DK GRN/WHT 817
A6 PPL 16
A7 LT GRN 80
A8 BLK 450
A9 BLK/WHT 238
A10 DK BLU 1393
A11 WHT 156
A12 PNK 639
SEAT BELT/ IGNITION KEY/ LAMPS/ TURN SIGNAL ALARM (CONVENIENCE CENTER)
W/ TWILIGHT SENTINEL
BLK/WHT B
C2
HEADLAMP AUTOMATIC CONTROL MODULE (RIGHT KICK PANEL)
GRY
W/O TWILIGHT SENTINEL
BUICK
GRY A
C2
HEADLAMP SWITCH
GRY
CHEVY
GRY C
I/P LAMPS DIMMER (BEHIND I/P, RIGHT SIDE OF STEERING COLUMN)
DK BLU
INTERIOR LIGHTS SYSTEM
LT GRN
F
NCA
IGNITION KEY ALARM SWITCH
NCA
E
*B4/**B5/***A7 YEL
*A3/**B4 BLK
SEAT BELT INDICATOR
INSTRUMENT CLUSTER
* ROADMASTER
** CAPRICE
*** IMPALA SS
NCA
NCA A BLK/WHT
NCA B BLK
SEAT BELT SWITCH (SEAT BELT BUCKLE)
BLK
BLK
G200 (BEHIND LEFT KICK PANEL)
G200 (BEHIND LEFT KICK PANEL)
TAN
WHT
WHT
WHT
WHT
WHT
RIGHT REAR DOOR JAMB SWITCH
LEFT FRONT DOOR JAMB SWITCH
RIGHT FRONT DOOR JAMB SWITCH
LEFT REAR DOOR JAMB SWITCH
78337

Fig. 53: Warning System Circuits

WIPER/WASHER

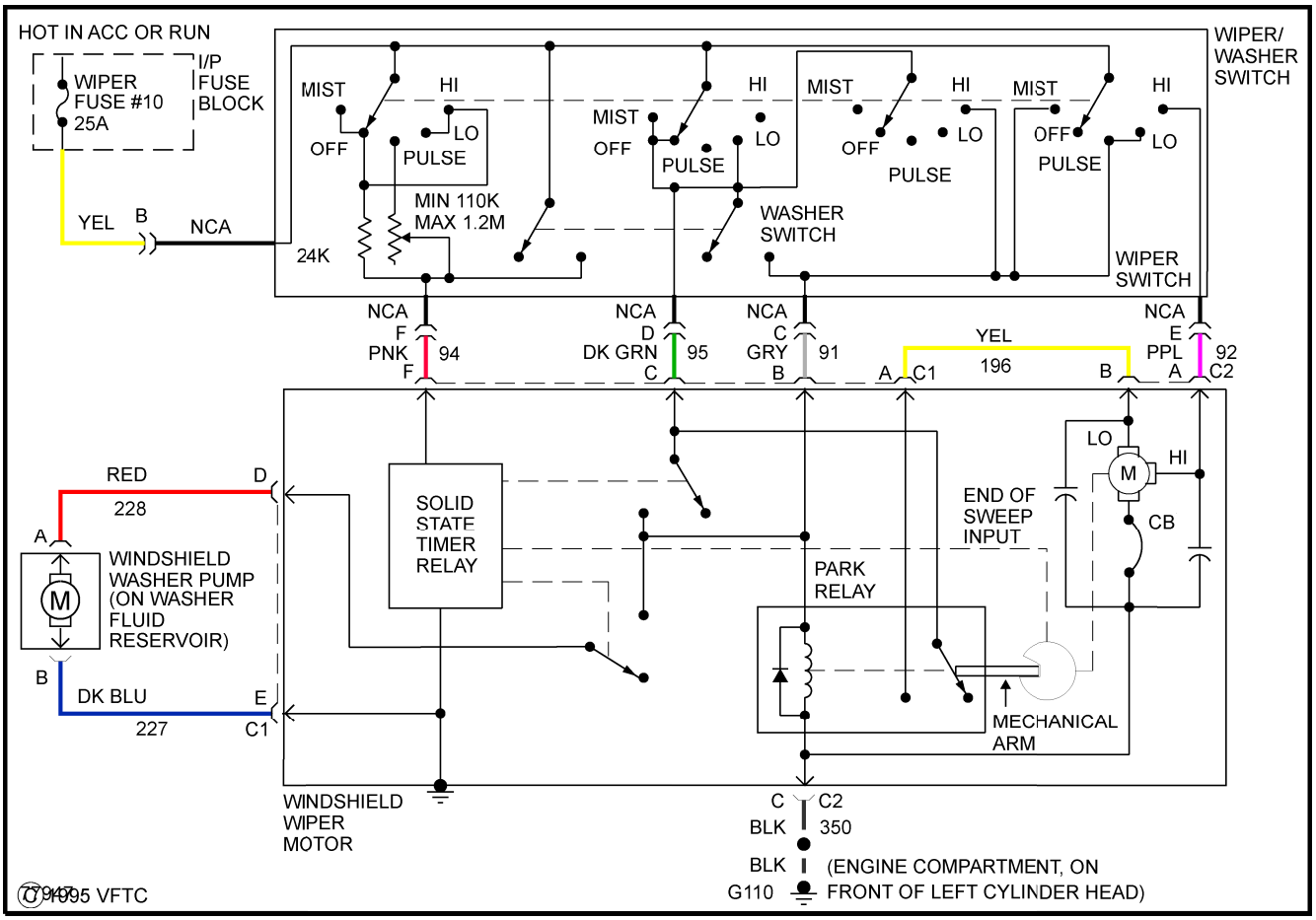
HOT IN ACC OR RUN
I/P FUSE BLOCK
WIPER FUSE #10 25A
YEL
B
NCA
24K
MIST
HI
OFF
LO
PULSE
MIN 110K
MAX 1.2M
WASHER SWITCH
WIPER SWITCH
WIPER/ WASHER SWITCH
NCA F PNK F 94
NCA D DK GRN C 95
NCA C GRY B 91
YEL 196
A C1
NCA E PPL A C2 92
RED 228
D
A
WINDSHIELD WASHER PUMP (ON WASHER FLUID RESERVOIR)
B
DK BLU 227
E C1
SOLID STATE TIMER RELAY
PARK RELAY
END OF SWEEP INPUT
LO
HI
CB
MECHANICAL ARM
WINDSHIELD WIPER MOTOR
C C2
BLK 350
BLK G110
(ENGINE COMPARTMENT, ON FRONT OF LEFT CYLINDER HEAD)
©1995 VFTC

Fig. 54: Front Wiper/Washer Circuit

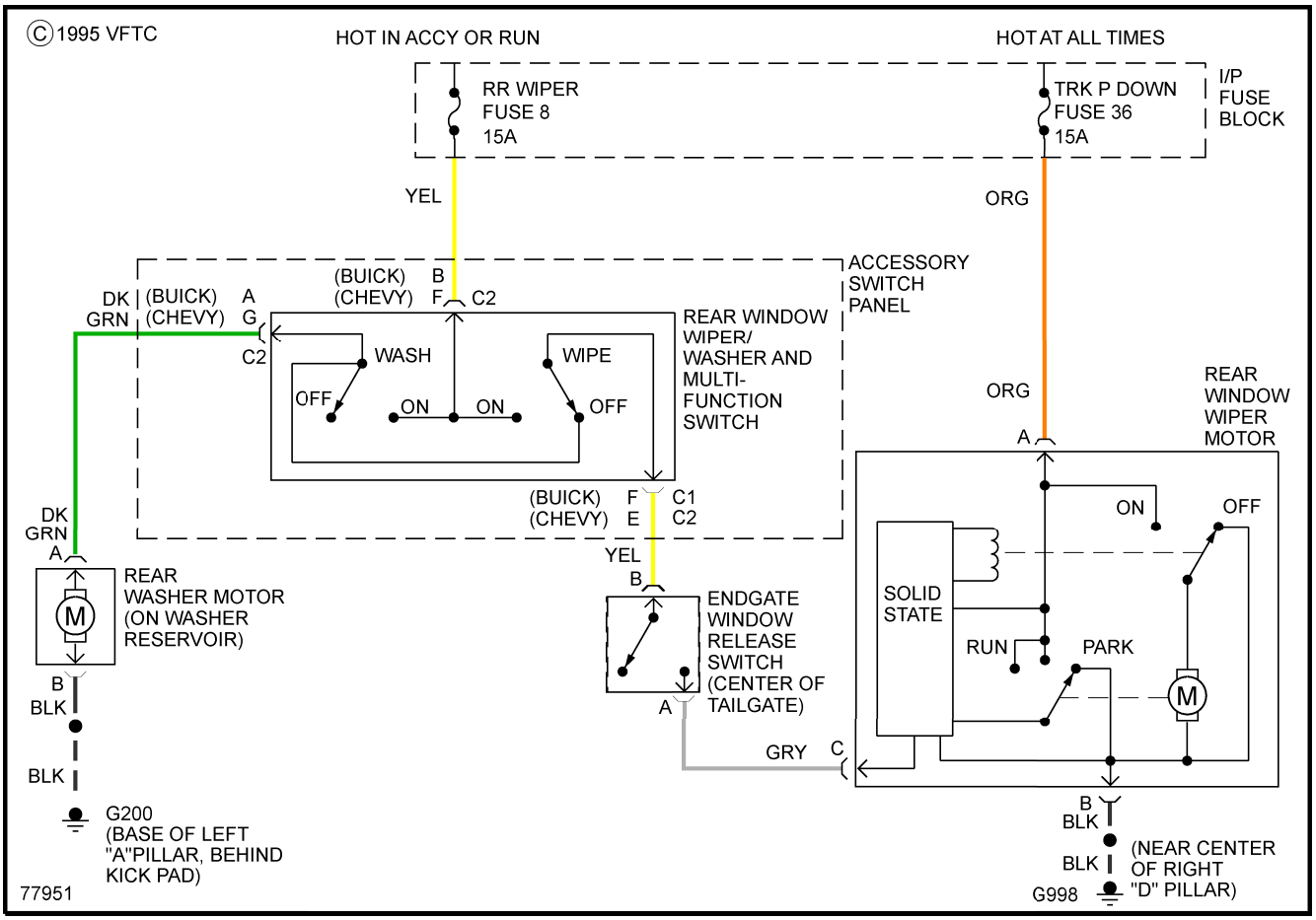
©1995 VFTC
HOT IN ACCY OR RUN
HOT AT ALL TIMES
RR WIPER FUSE 8 15A
TRK P DOWN FUSE 36 15A
I/P FUSE BLOCK
YEL
ORG
ACCESSORY SWITCH PANEL
(BUICK) (CHEVY) B F C2
DK GRN
(BUICK) (CHEVY) A G
C2
WASH
WIPE
OFF
ON
ON
OFF
REAR WINDOW WIPER/ WASHER AND MULTI-FUNCTION SWITCH
ORG
REAR WINDOW WIPER MOTOR
A
(BUICK) (CHEVY) F E C1 C2
ON
OFF
DK GRN
A
YEL
B
SOLID STATE
REAR WASHER MOTOR (ON WASHER RESERVOIR)
ENDGATE WINDOW RELEASE SWITCH (CENTER OF TAILGATE)
RUN
PARK
B
BLK
A
GRY
C
BLK
B
BLK
BLK
G200 (BASE OF LEFT "A"PILLAR, BEHIND KICK PAD)
(NEAR CENTER OF RIGHT "D" PILLAR)
77951
G998

Fig. 55: Rear Wiper/Washer Circuit